HT-C800DP

SERVICE MANUAL

Ver 1.1 2003. 06

US Model
Canadian Model
AEP Model
UK Model
E Model

- HT-C800DP is composed of following models.
  As for the service manual, it is issued for each component model, then, please refer to them.

COMPONENT MODEL NAME

HT-C800DP	
US, CND, E51, MX model	AEP, UK model
AMPLIFIER, CD/DVD, TUNER AVD-K800P	
SUB WOOFER SPEAKER SS-WMSP80	
SS-CRP75	SS-CRP2
CENTER SPEAKER SS-CNP75	CENTER SPEAKER SS-CNP2
SURROUND SPEAKER SS-MSP75	SURROUND SPEAKER SS-MSP2

- Abbreviation
  CND : Canadian model.
  E51 : 220V AC Area in E model.
  MX : Mexican model.

PARTS LIST

Part No.	Description	Remarks
	ACCESSORIES **********	
1-477-839-11	COMMANDER, STANDARD (RM-U800)	
1-501-374-12	ANTENNA, LOOP (AM)	
1-793-184-22	CONNECTOR (F TYPE ADAPTOR) (FM)	
1-827-243-11	CORD (WITH CONNECTOR) (FOR SPEAKER)	
3-071-119-01	COVER, BATTERY (FOR RM-U800)	
4-235-237-01	FOOT (FOR SUB WOOFER SPEAKER)	
4-244-915-01	FOOT (FOR CENTER/SURROUND SPEAKER)	
4-247-292-11	INSTRUCTION MANUAL (ENGLISH) (US,CND,AEP,UK,E51)	
4-247-292-21	INSTRUCTION MANUAL (FRENCH) (CND,AEP,E51)	
4-247-292-31	INSTRUCTION MANUAL (SPANISH) (AEP,E51,MX)	
4-247-292-41	INSTRUCTION MANUAL (DUTCH,SWEDISH,GERMAN) (AEP)	
4-247-292-51	INSTRUCTION MANUAL (ITALIAN,POLISH) (AEP)	
4-247-292-61	INSTRUCTION MANUAL (PORTUGUESE) (AEP)	

HOME THEATER SYSTEM

9-877-318-02
2003F16-1
© 2003.06
Sony Corporation
Home Audio Company
Published by Sony Engineering Corporation

SONY®

REVISION HISTORY

Clicking the version allows you to jump to the revised page.
Also, clicking the version at the upper right on the revised page allows you to jump to the next revised page.

Ver.	Date	Description of Revision
1.0	2003.05	New
1.1	2003.06	Correction of the component model name, SS-WMSP80 (SPM-03049)

AVD-K800P

SERVICE MANUAL

Ver 1.2 2004. 09

US Model
Canadian Model
AEP Model
UK Model
E Model

AVD-K800P is the amplifier, CD/DVD and tuner system in HT-C800DP.

This system incorporates with Dolby* Digital and Dolby Pro Logic (II) adaptive matrix surround decoder and the DTS** Digital Surround System.

* Manufactured under license from Dolby Laboratories.
"Dolby", "Pro Logic" and the double-D symbol are trademarks of Dolby Laboratories.
** Manufactured under license from Digital Theater Systems, Inc.
"DTS" and "DTS Digital Surround" are trademarks of Digital Theater Systems, Inc.

Model Name Using Similar Mechanism	NEW
Mechanism Type	CDM79-DVBU22
Optical Pick-up Name	DBU-1

SPECIFICATIONS

AUDIO POWER SPECIFICATIONS

POWER OUTPUT AND TOTAL HARMONIC DISTORTION:
With 6 ohm loads, both channels driven, from 120 – 20,000 Hz; rated 60 watts per channel minimum RMS power , with no more than 0.7 % total harmonic distortion from 250 milliwatts to rated output (USA model only).

Amplifier section

Rated Power Output at Stereo Mode
60 W + 60 W (6 ohms, at 1 kHz, THD 0.7 %)
Reference Power Output Front: 100 W/ch (6 ohms at 1 kHz, THD 10 %)
Center*: 100 W (6 ohms at 1 kHz, THD 10 %)
Surround*: 100 W/ch (6 ohms at 1 kHz, THD 10 %)
Sub woofer*: 100 W (6 ohms at 100 Hz, THD 10 %)

* *Depending on the sound field settings and the source, there may be no sound output.*

Inputs (Analog) ANALOG IN:
Sensitivity: 500 mV
Impedance: 50 kilohms
Outputs (Analog) PHONES:
Accepts low- and high-impedance headphones

CD/DVD system

Laser Semiconductor laser
(DVD: λ = 650 nm)
(CD: λ = 780 nm)
Emission duration: continuous
Signal format system NTSC/PAL or NTSC
Frequency response (at 2 CH STEREO mode)
DVD (PCM): 2 Hz to 22 kHz (±1.0 dB)
CD: 2 Hz to 20 kHz (±1.0 dB)
Signal-to-noise ratio More than 80 dB
Harmonic distortion Less than 0.03 %

FM tuner section

System PLL quartz-locked digital synthesizer system
Tuning range
North American models: 87.5 – 108.0 MHz (100 kHz step)
Other models: 87.5 – 108.0 MHz (50 kHz step)
Antenna FM wire antenna
Antenna terminals 75 ohms, unbalanced
Intermediate frequency 10.7 MHz

AM tuner section

System PLL quartz-locked digital synthesizer system
Tuning range
North American models: 530 – 1,710 kHz (with the interval set at 10 kHz)
531 – 1,710 kHz (with the interval set at 9 kHz)
European models: 531 – 1,602 kHz (with the interval set at 9 kHz)
Mexican models: 530 – 1,610 kHz (with the interval set at 10 kHz)
Other models: 530 – 1,610 kHz (with the interval set at 10 kHz)
531 – 1,602 kHz (with the interval set at 9 kHz)
Antenna AM loop antenna
Intermediate frequency 450 kHz

Video section

Inputs Video: 1 Vp-p 75 ohms
Outputs Video: 1 Vp-p 75 ohms
Component: Y: 1 Vp-p 75 ohms
P_B/C_B: 0.7 Vp-p 75 ohms
P_R/C_R: 0.7 Vp-p 75 ohms

General

Power requirements
North American and Mexican models:
120 V AC, 60 Hz
European models: 230 V AC, 50/60 Hz
Other models: 120/220 V AC, 50/60 Hz
Power consumption
Canadian models: 240 VA
Other models: 190 W
Power consumption (at Power Saving Mode):
0.5 W
Dimensions (approx.) 430 × 170 × 450 mm (17 × 6 7/8 × 17 7/8 inches)
(w/h/d) incl. projecting parts
Mass (approx.) 11.5 kg (25 lb 6 oz.)
Operating temperature 5˚C to 35˚C (41˚F to 95˚F)
Operating humidity 5 % to 90 %

Design and specifications are subject to change without notice.

COMPACT AV SYSTEM

9-877-319-03 **Sony Corporation**
2004I16-1 **Audio Group**
© 2004.09
Published by Sony Engineering Corporation

SONY®

Laser component in this product is capable of emitting radiation exceeding the limit for Class 1.

This appliance is classified as a CLASS 1 LASER product. The CLASS 1 LASER PRODUCT MARKING is located on the rear exterior.

The following caution label is located inside the apparatus.

CAUTION
Use of controls or adjustments or performance of procedures other than those specified herein may result in hazardous radiation exposure.

Notes on chip component replacement

- Never reuse a disconnected chip component.
- Notice that the minus side of a tantalum capacitor may be damaged by heat.

Flexible Circuit Board Repairing

- Keep the temperature of soldering iron around 270˚C during repairing.
- Do not touch the soldering iron on the same conductor of the circuit board (within 3 times).
- Be careful not to apply force on the conductor when soldering or unsoldering.

SAFETY CHECK-OUT

After correcting the original service problem, perform the following safety checks before releasing the set to the customer:
Check the antenna terminals, metal trim, “metallized” knobs, screws, and all other exposed metal parts for AC leakage. Check leakage as described below.

LEAKAGE

The AC leakage from any exposed metal part to earth Ground and from all exposed metal parts to any exposed metal part having a return to chassis, must not exceed 0.5 mA (500 microampers). Leakage current can be measured by any one of three methods.

1. A commercial leakage tester, such as the Simpson 229 or RCA WT-540A. Follow the manufacturers’ instructions to use these instruments.
2. A battery-operated AC milliammeter. The Data Precision 245 digital multimeter is suitable for this job.
3. Measuring the voltage drop across a resistor by means of a VOM or battery-operated AC voltmeter. The “limit” indication is 0.75 V, so analog meters must have an accurate low-voltage scale. The Simpson 250 and Sanwa SH-63Trd are examples of a passive VOM that is suitable. Nearly all battery operated digital multimeters that have a 2V AC range are suitable. (See Fig. A)

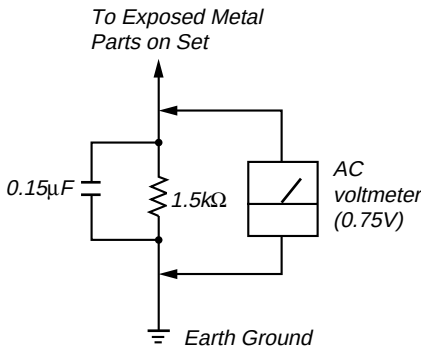

Fig. A. Using an AC voltmeter to check AC leakage.

Unleaded solder

Boards requiring use of unleaded solder are printed with the lead-free mark (LF) indicating the solder contains no lead.
(Caution: Some printed circuit boards may not come printed with the lead free mark due to their particular size.)

: LEAD FREE MARK

Unleaded solder has the following characteristics.

- Unleaded solder melts at a temperature about 40°C higher than ordinary solder.
  Ordinary soldering irons can be used but the iron tip has to be applied to the solder joint for a slightly longer time.
  Soldering irons using a temperature regulator should be set to about 350°C.
  Caution: The printed pattern (copper foil) may peel away if the heated tip is applied for too long, so be careful!
- Strong viscosity
  Unleaded solder is more viscous (sticky, less prone to flow) than ordinary solder so use caution not to let solder bridges occur such as on IC pins, etc.
- Usable with ordinary solder
  It is best to use only unleaded solder but unleaded solder may also be added to ordinary solder.

SAFETY-RELATED COMPONENT WARNING!!

COMPONENTS IDENTIFIED BY MARK ⚠ OR DOTTED LINE WITH MARK ⚠ ON THE SCHEMATIC DIAGRAMS AND IN THE PARTS LIST ARE CRITICAL TO SAFE OPERATION. REPLACE THESE COMPONENTS WITH SONY PARTS WHOSE PART NUMBERS APPEAR AS SHOWN IN THIS MANUAL OR IN SUPPLEMENTS PUBLISHED BY SONY.

ATTENTION AU COMPOSANT AYANT RAPPORT À LA SÉCURITÉ!

LES COMPOSANTS IDENTIFÉS PAR UNE MARQUE ⚠ SUR LES DIAGRAMMES SCHÉMATIQUES ET LA LISTE DES PIÈCES SONT CRITIQUES POUR LA SÉCURITÉ DE FONCTIONNEMENT. NE REMPLACER CES COMPOSANTS QUE PAR DES PIÈSES SONY DONT LES NUMÉROS SONT DONNÉS DANS CE MANUEL OU DANS LES SUPPÉMENTS PUBLIÉS PAR SONY.

NOTES ON HANDLING THE OPTICAL PICK-UP BLOCK OR BASE UNIT

The laser diode in the optical pick-up block may suffer electrostatic break-down because of the potential difference generated by the charged electrostatic load, etc. on clothing and the human body.
During repair, pay attention to electrostatic break-down and also use the procedure in the printed matter which is included in the repair parts.
The flexible board is easily damaged and should be handled with care.

NOTES ON LASER DIODE EMISSION CHECK

The laser beam on this model is concentrated so as to be focused on the disc reflective surface by the objective lens in the optical pick-up block. Therefore, when checking the laser diode emission, observe from more than 30 cm away from the objective lens.

LASER DIODE AND FOCUS SEARCH OPERATION CHECK

Carry out the "S curve check" in "CD section adjustment" and check that the S curve waveform is output several times.

MODEL IDENTIFICATION

— BACK PANEL —

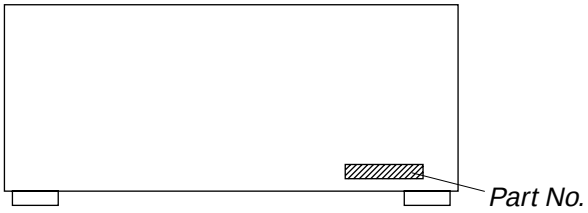

Model	PARTS No.
US and E51 models	4-244-942-0☐
Canadian model	4-244-942-1☐
Mexican model	4-244-942-2☐
AEP model	4-244-942-3☐
UK model	4-244-942-4☐

- Abbreviation
  E51 : Chilean and peruvian models.

HOW TO OPEN THE DISC TRY WHEN POWER SWITCH TURNS OFF

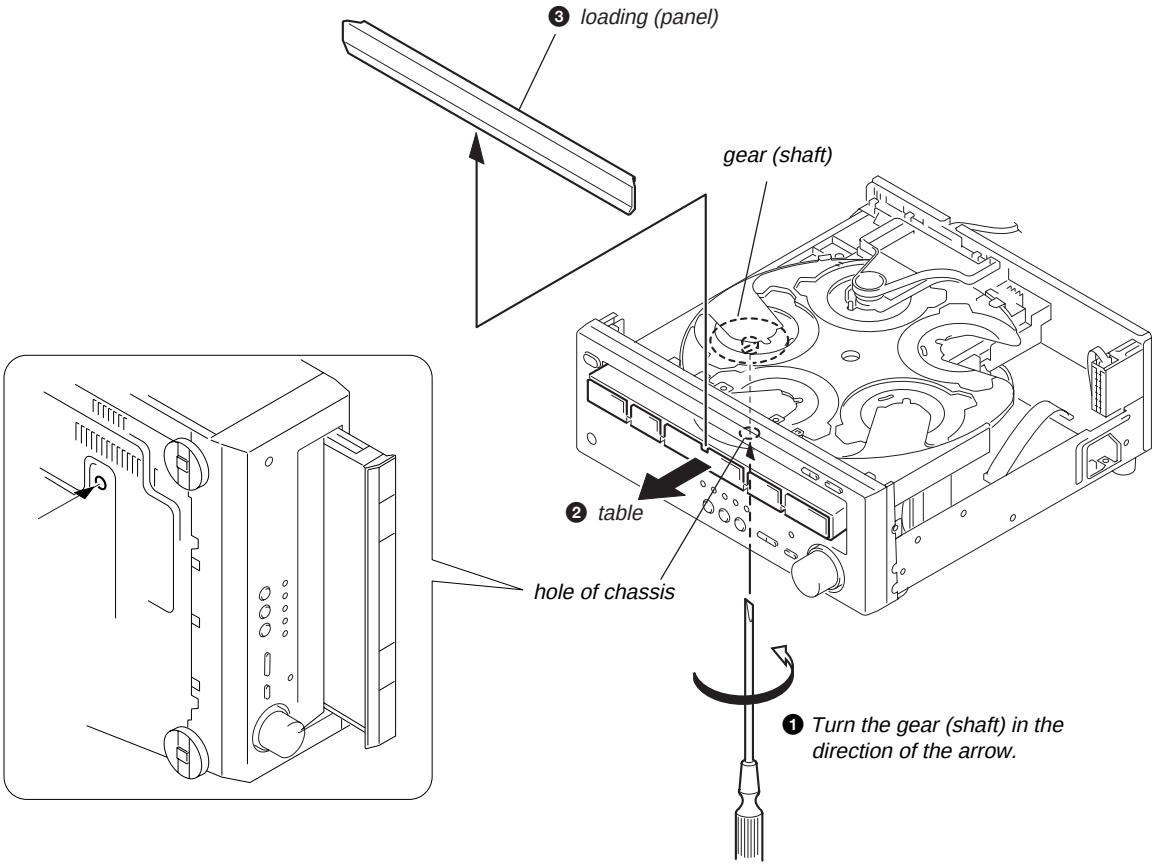

NOTES ON DMB03 BOARD EXCHANGE

If a DMB03 board is exchanged, "DRIVE AUTO ADJUSTMENT" may be unable to be performed. In this case, initialize a memory in the following procedure.

1. Starting Test Mode (see page 17).
2. Press the 2 button of remote commander to set the Drive Manual Operation (see page 19).
3. Press the 6 button of remote commander to set the Memory Check (see page 21).
4. Press the [CLEAR] button of remote commander to initialize a memory.

AUTO SERVO ADJUSTMENT

After parts related to the servo circuit (RF amplifier (IC001), DSP (IC509), motor driver (IC501), EEPROM (IC903) so on) are replaced, re-adjusting the servo circuit is necessary. Select "ALL" at "1. DRIVE AUTO ADJUSTMENT" (Refer to page 18 in TEST MODE) and adjust DVD-SL (single layer), CD and DVD-DL (dual layer).

RFMON Level Check

Perform a RFMON level check before exchanging optical pick-up.

Measurement Point: DMB03 board CN501
13pin (RFMON) — 29pin (AGND)

RFMON signal waveform

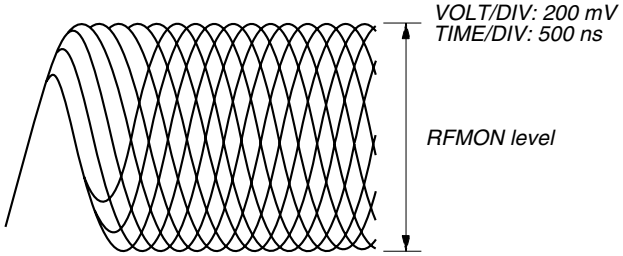

• Standard value

	Test Disc	RFMON level Standard Value
DVD	TDV-520CSO (J-2501-236-A)	1.09 ± 0.2Vp-p
CD	LUV-P01 (4-999-032-01)	1.05 ± 0.2Vp-p

TABLE OF CONTENTS

1. GENERAL 5

2. DISASSEMBLY
2-1. Case 7
2-2. Loading (PANEL) 8
2-3. CD Mechanism Deck (CDM79-DVBU22) 8
2-4. Front Panel Assy 9
2-5. DISPLAY Board, OPEN/CLOSE Board, POWER SWITCH Board, HP Board 9
2-6. Tuner Unit (TM301), I/O Board 10
2-7. DMB03 Board 10
2-8. DC Fan (FAN1) 11
2-9. MAIN Board 11
2-10. Table Assy 12
2-11. SE-130 Board 13
2-12. DC Motor (M001) 14
2-13. Pickup Unit Section 14
2-14. RF Board 15

3. TEST MODE 16

4. DIAGRAMS
4-1. Circuit Board Location 25
4-2. Block Diagrams
— RF SERVO Section — 26
— VIDEO Section — 27
— AUDIO Section — 28
— AMP Section — 29
— POWER Section — 30
4-3. Printed Wiring Board — RF Section — 31
4-4. Schematic Diagram — RF Section — 32
4-5. Printed Wiring Board — DMB Section (SIDE A) — 33
4-6. Printed Wiring Board — DMB Section (SIDE B) — 34
4-7. Schematic Diagram — DMB Section (1/8) — 35
4-8. Schematic Diagram — DMB Section (2/8) — 36
4-9. Schematic Diagram — DMB Section (3/8) — 37
4-10. Schematic Diagram — DMB Section (4/8) — 38
4-11. Schematic Diagram — DMB Section (5/8) — 39
4-12. Schematic Diagram — DMB Section (6/8) — 40
4-13. Schematic Diagram — DMB Section (7/8) — 41
4-14. Schematic Diagram — DMB Section (8/8) — 42
4-15. Printed Wiring Board — I/O Section — 43
4-16. Schematic Diagram — I/O Section — 44
4-17. Printed Wiring Board — MAIN Section — 45
4-18. Schematic Diagram — MAIN Section (1/3) — 46
4-19. Schematic Diagram — MAIN Section (2/3) — 47
4-20. Schematic Diagram — MAIN Section (3/3) — 48
4-21. Printed Wiring Board
— VOLTAGE SELECTOR, LOADING Section — 49
4-22. Schematic Diagram — LOADING Section — 50
4-23. Printed Wiring Board — DISPLAY Section — 51
4-24. Schematic Diagram — DISPLAY Section — 52
4-25. IC Block Diagrams 54
4-26. IC Pin Function Description 61

5. EXPLODED VIEWS
5-1. Case Section 70
5-2. Front Panel Section 71
5-3. Chassis Section 72
5-4. CD Mechanism Deck Section-1 (CDM79-DVBU22) 73
5-5. CD Mechanism Deck Section-2 (CDM79-DVBU22) 74

6. ELECTRICAL PARTS LIST 75

SECTION 1
GENERAL

This section is extracted from instruction manual.

Front Panel

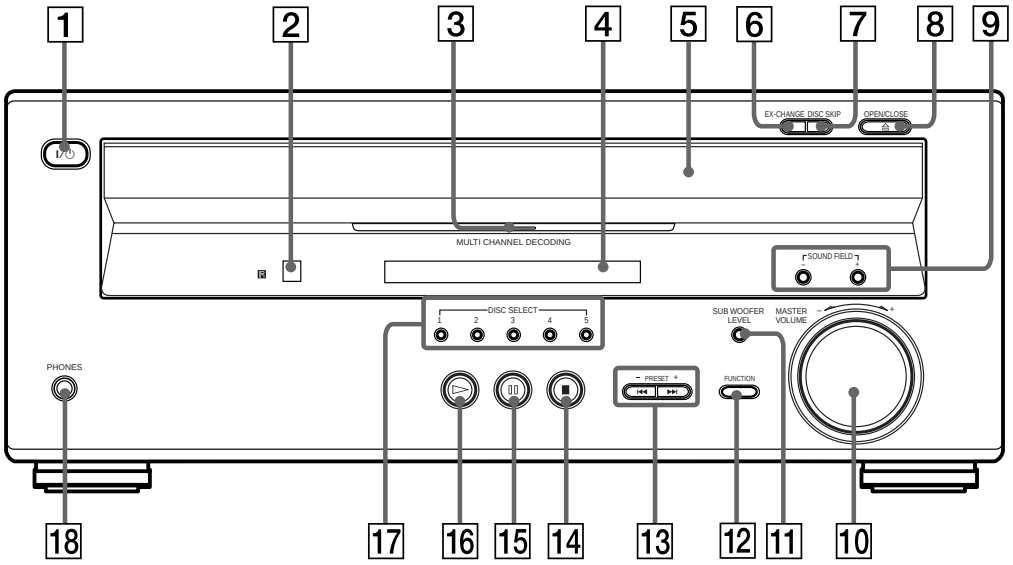

1 I/⏻ (power switch) (29)
2 (remote sensor) (18)
3 MULTI CHANNEL DECODING indicator (49)
4 Front panel display (12)
5 Disc tray (29)
6 EX-CHANGE (30)
7 DISC SKIP (29)
8 ≙ OPEN/CLOSE (29)
9 SOUND FIELD +/– (50)
10 MASTER VOLUME control (29, 70)
11 SUB WOOFER LEVEL (69)
12 FUNCTION (29)
13 PRESET +/–, ⏮/⏭ (27, 30)
14 ■ (stop) (30)
15 ⏸ (pause) (30)
16 ▷ (play) (29)
17 DISC SELECT 1 – 5 (29)
18 PHONES jack (29)

Rear Panel

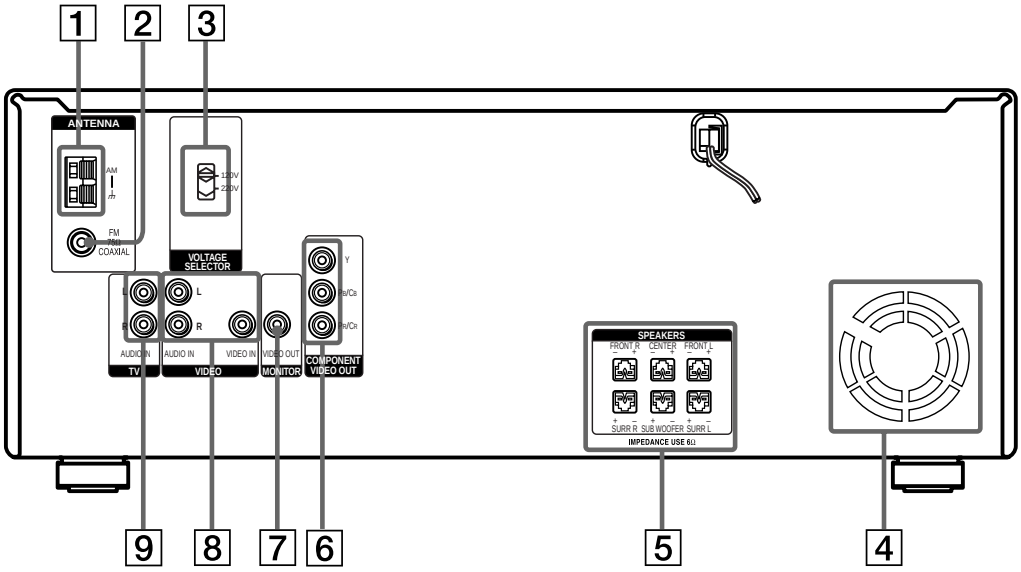

1 AM antenna terminals (22)
2 FM 75Ω COAXIAL antenna jack (22)
3 VOLTAGE SELECTOR (only for equipped models) (25)
4 Ventilation holes (fan) (74)
5 SPEAKERS jacks (20)
6 COMPONENT VIDEO OUT jacks (24)
7 MONITOR (VIDEO OUT) jack (24)
8 VIDEO (AUDIO L/R IN/VIDEO IN) jacks (24)
9 TV (AUDIO L/R IN) jacks (24)

Quick reference for Remote Commander

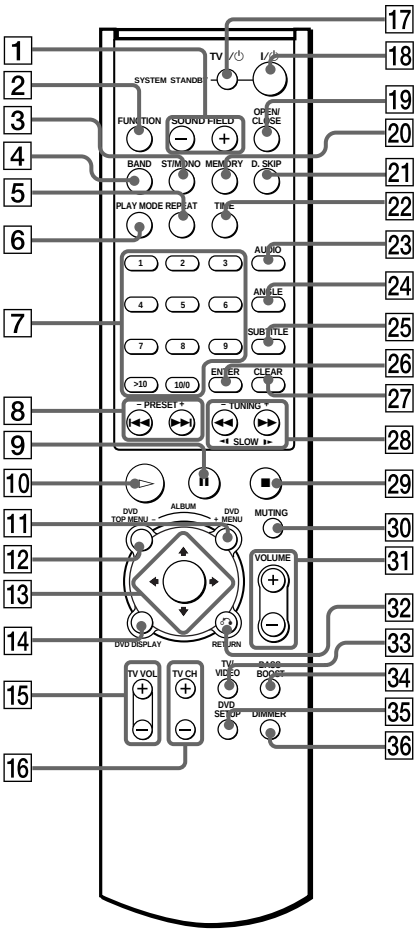

Note

The remote control of the unit employs command signals in common with other Sony DVD products. Thus, depending on the button, other Sony DVD products may respond.

1 **SOUND FIELD +/–**
Selects the sound field.

2 **FUNCTION**
Selects the component you want to use.

3 **ST/MONO**
Switches monaural or stereo of FM stereo reception.

4 **BAND**
Selects AM or FM band.

5 **REPEAT**
Displays the "REPEAT" display on the TV screen.

6 **PLAY MODE**
Selects program or shuffle play mode.

7 **Number buttons**
Selects the items of settings.

8 **⏮/⏭, PRESET +/–**
⏮/⏭: Press to go to the next chapter or track or to go back to the previous chapter or track.
PRESET + / – : Scan all preset stations.

9 **❚❚ PAUSE**
Pauses playing a disc.

10 **▷**
Plays a disc.

11 **DVD MENU/ALBUM +**
Displays the DVD menu on the TV screen.

12 **DVD TOP MENU/ALBUM –**
Displays the title menu on the TV screen.

13 **←/↑/↓/→/ENTER**
Selects and executes the items or settings.

14 **DVD DISPLAY**
Displays the Control Menu display on the TV screen to set or adjust the items.

15 **TV VOL +/–**
Adjust the volume of the TV.

16 **TV CH +/–**
Select preset TV channels.

17 **TV I/⏻ (on/standby)**
Turns the TV on and off.

18 **I/⏻ (on/standby)**
Turns on and off the power of the system.

19 **⏏ OPEN/CLOSE**
Opens or closes the disc tray.

20 **MEMORY**
Press to store a preset station.

21 **D.SKIP**
Skips discs.

22 **TIME**
Displays the playing time of the disc, etc., on the front panel display.

23 **AUDIO**
Changes the sound while playing a DVD or VIDEO CD.

24 **ANGLE**
Changes the angles when playing a DVD.

25 **SUBTITLE**
Changes the subtitles when playing a DVD.

26 **ENTER**
Executes the items or settings.

27 **CLEAR**
Press to return to the Continuous play, etc.

28 **◀◀/▶▶, ◀❚/❚▶ SLOW, TUNING +/–**
◀◀ / ▶▶ (SCAN) : Locate a point while monitoring the picture while playing disc.
◀❚ / ❚▶ (SLOW) : Play a disc in slow motion in the pause mode.
TUNING + / – : Scan all available radio stations.

29 **■ STOP**
Stops playing a disc.

30 **MUTING**
Mutes the sound.

31 **VOLUME +/–**
Adjust the SYSTEM volume.

32 **↶ RETURN**
Press to return to the previously selected screen, etc.

33 **TV/VIDEO**
Changes the input mode of the TV.

34 **BASS BOOST**
Adjust the bass tone.

35 **DVD SETUP**
Displays the setup display on the TV screen to set or adjust the items.

36 **DIMMER**
Changes the brightness of the front panel display by two steps.

SECTION 2
DISASSEMBLY

• The equipment can be removed using the following procedure.

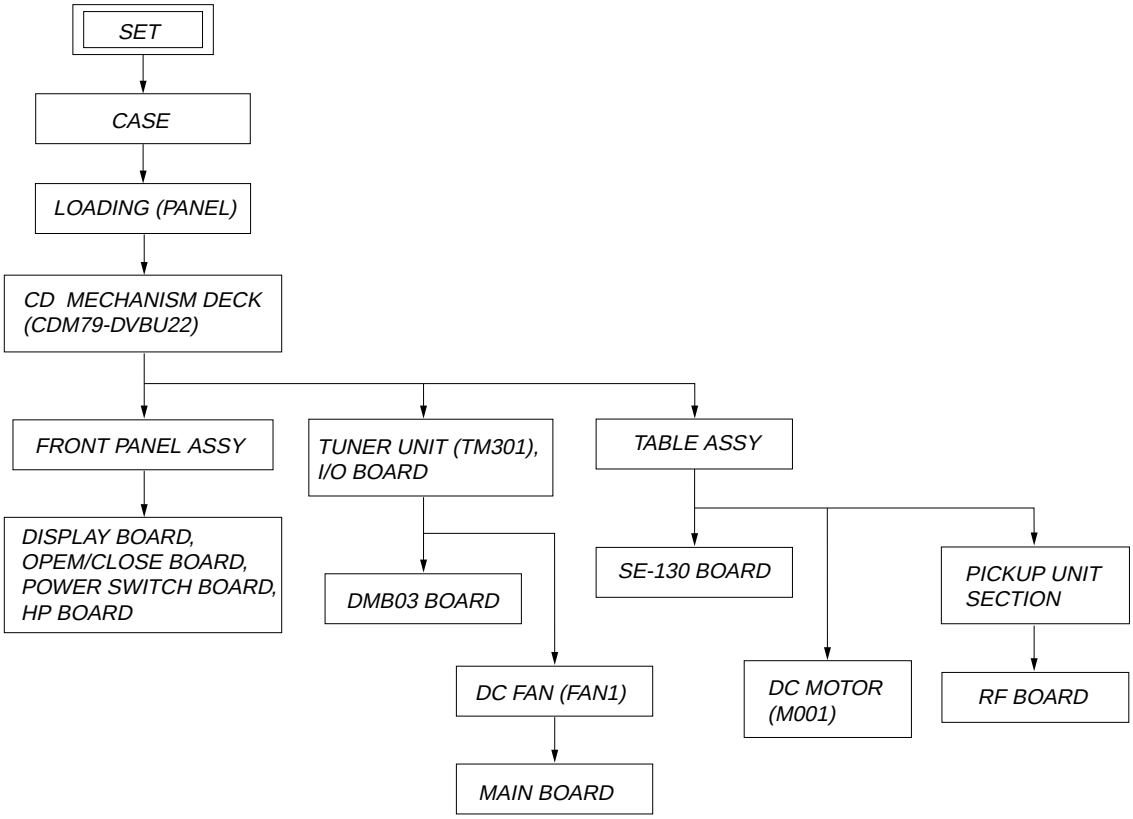

Note: Follow the disassembly procedure in the numerical order given.

2-1. Case

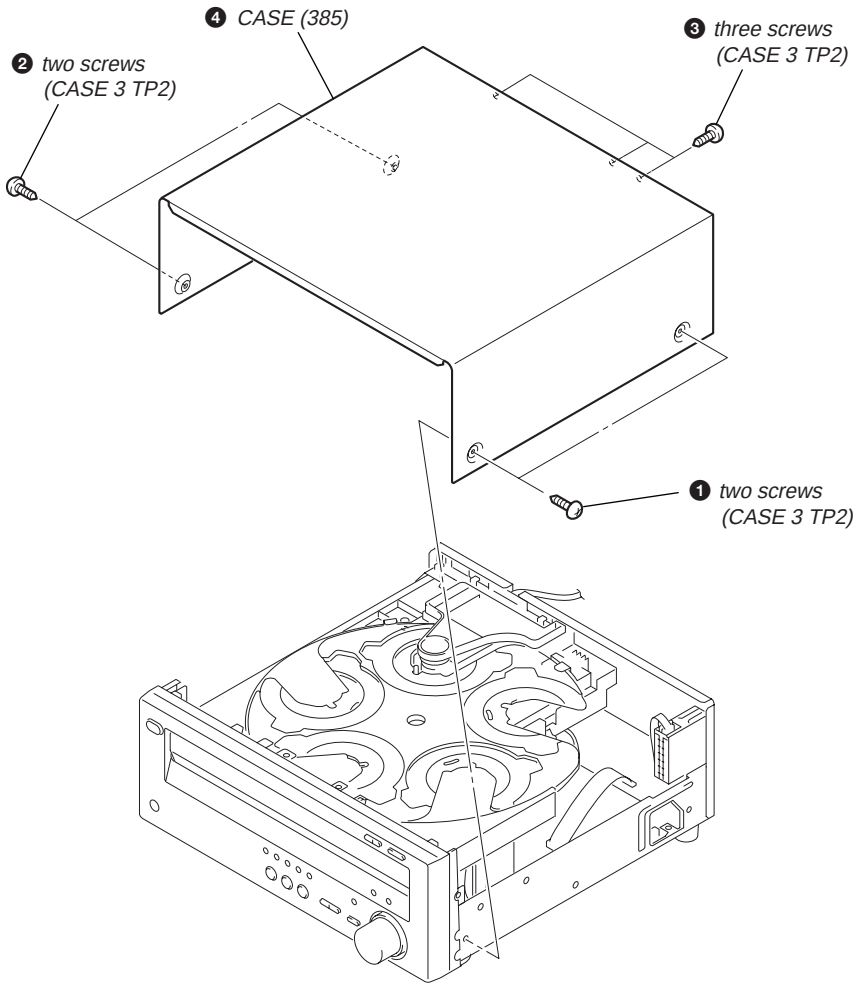

2-2. Loading (PANEL)

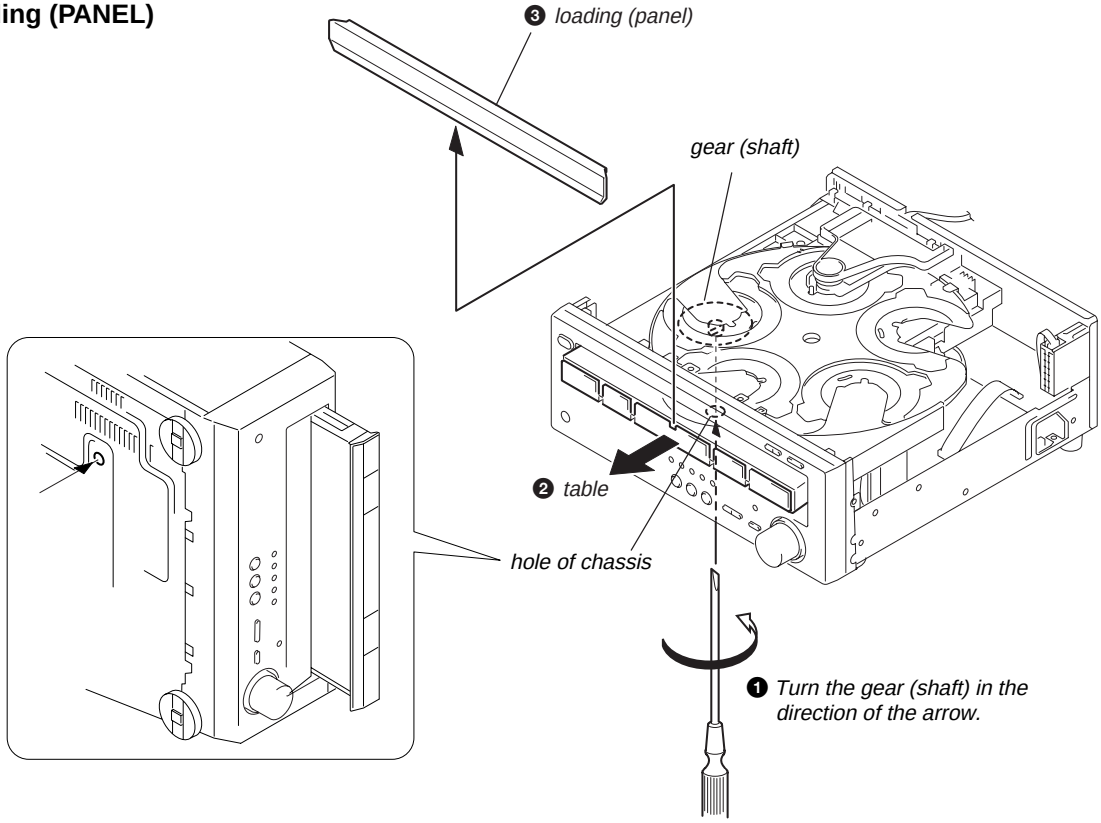

2-3. CD Mechanism Deck (CDM79-DVBU22)

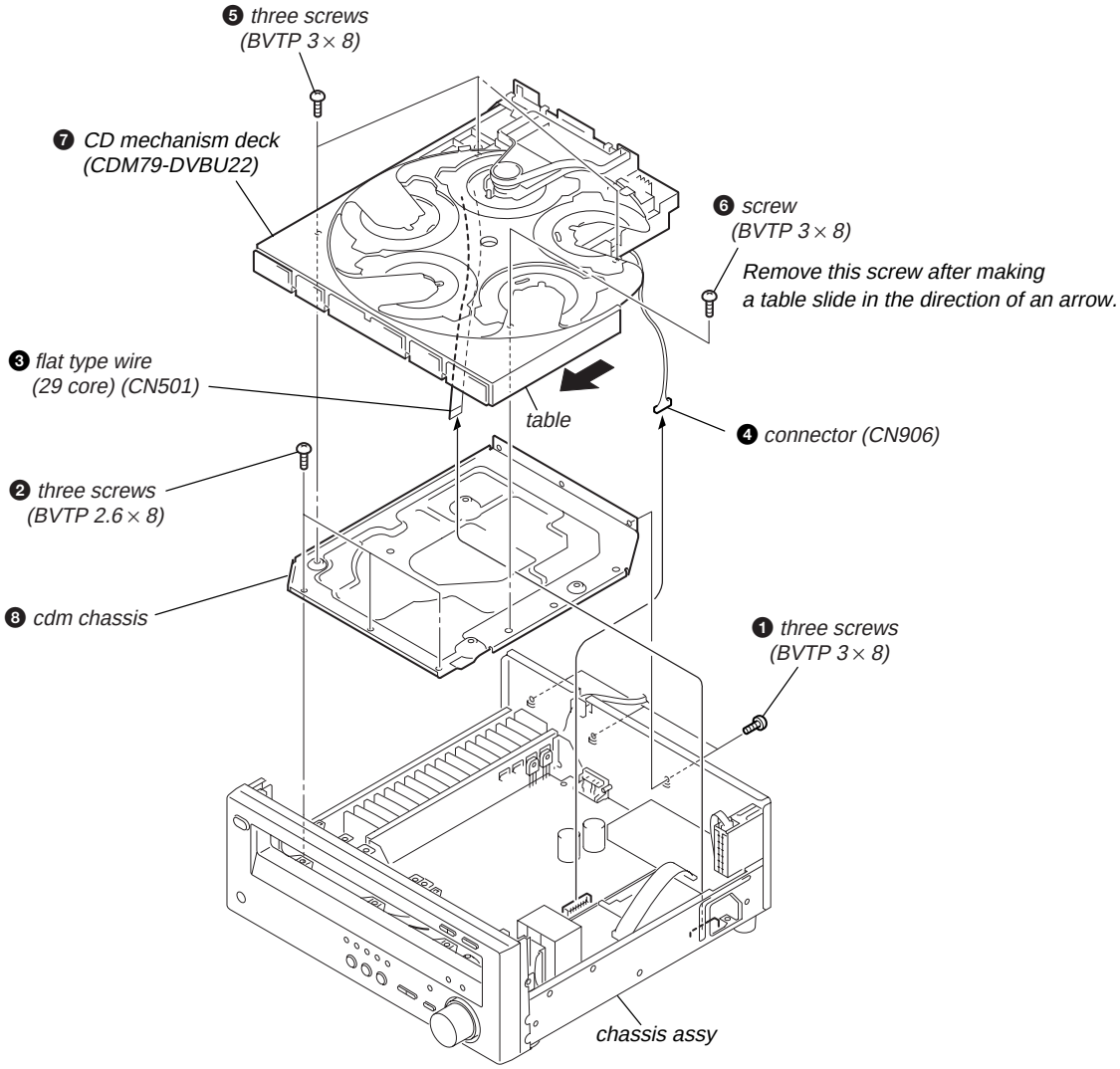

2-4. Front Panel Assy

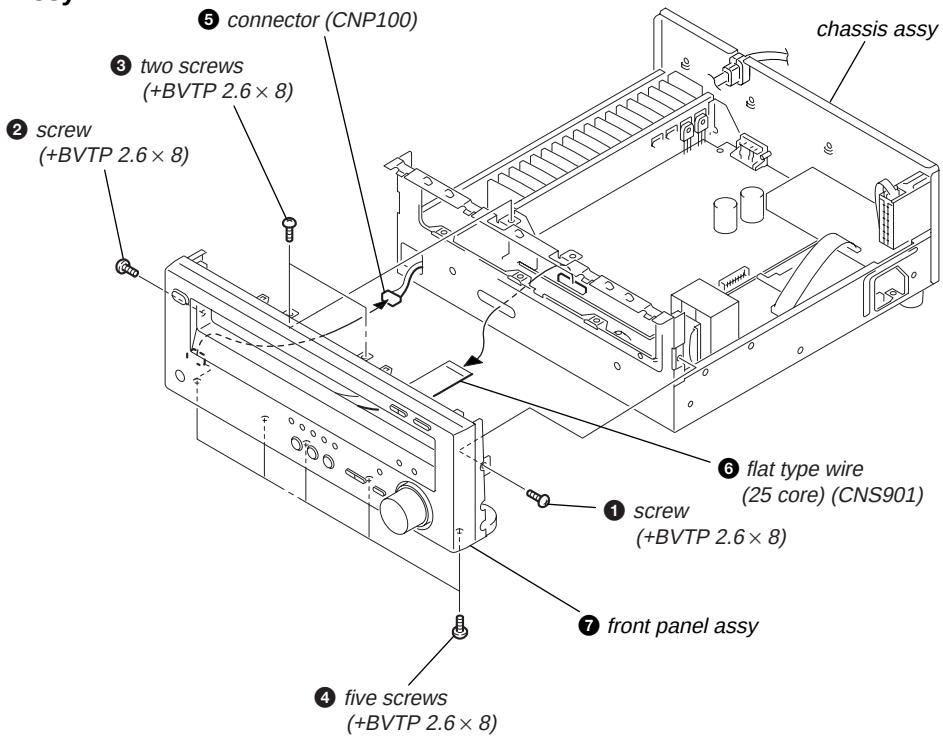

2-5. DISPLAY Board, OPEN/CLOSE Board, POWER SWITCH Board, HP Board

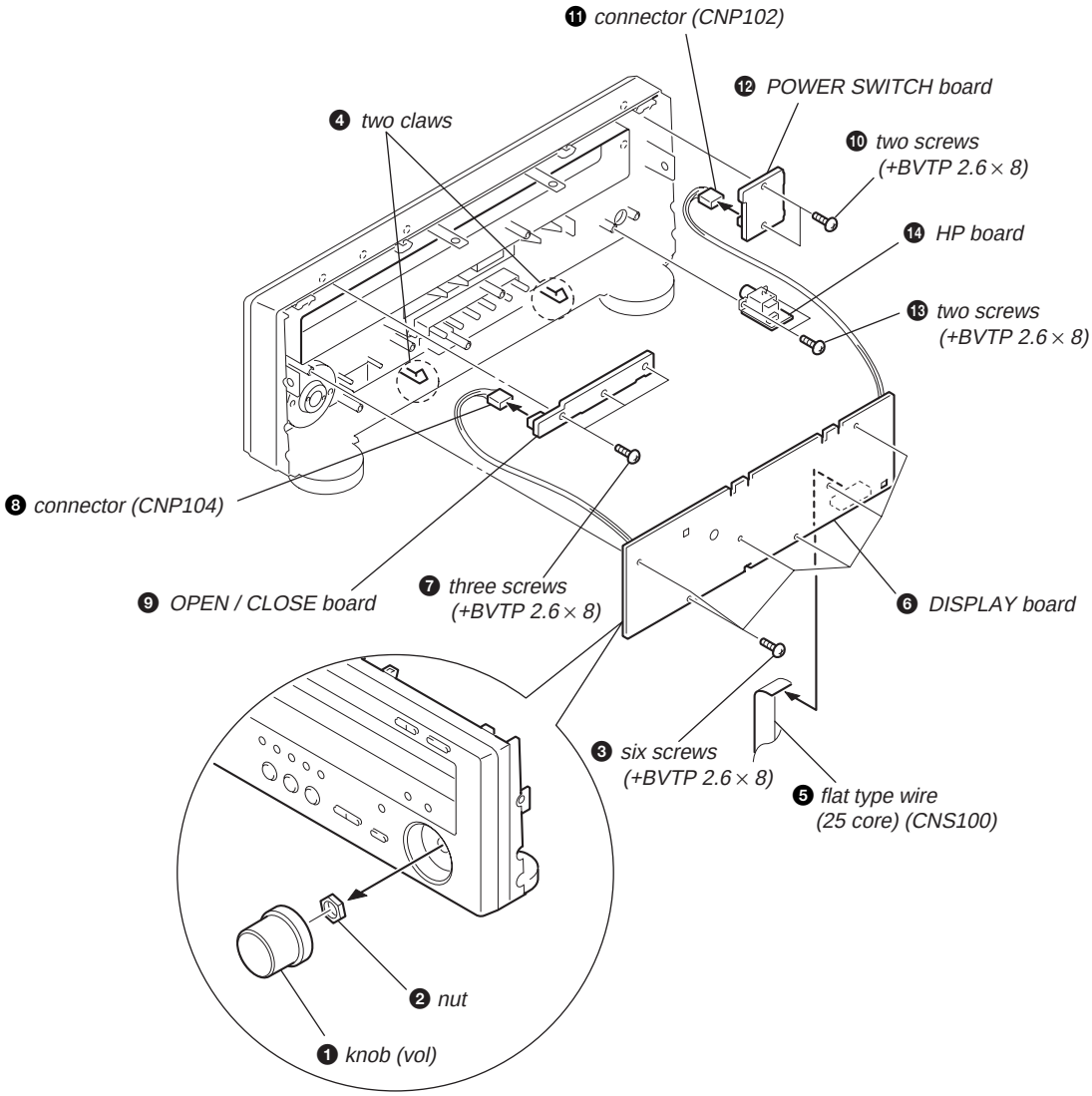

2-6. Tuner Unit (TM301), I/O Board

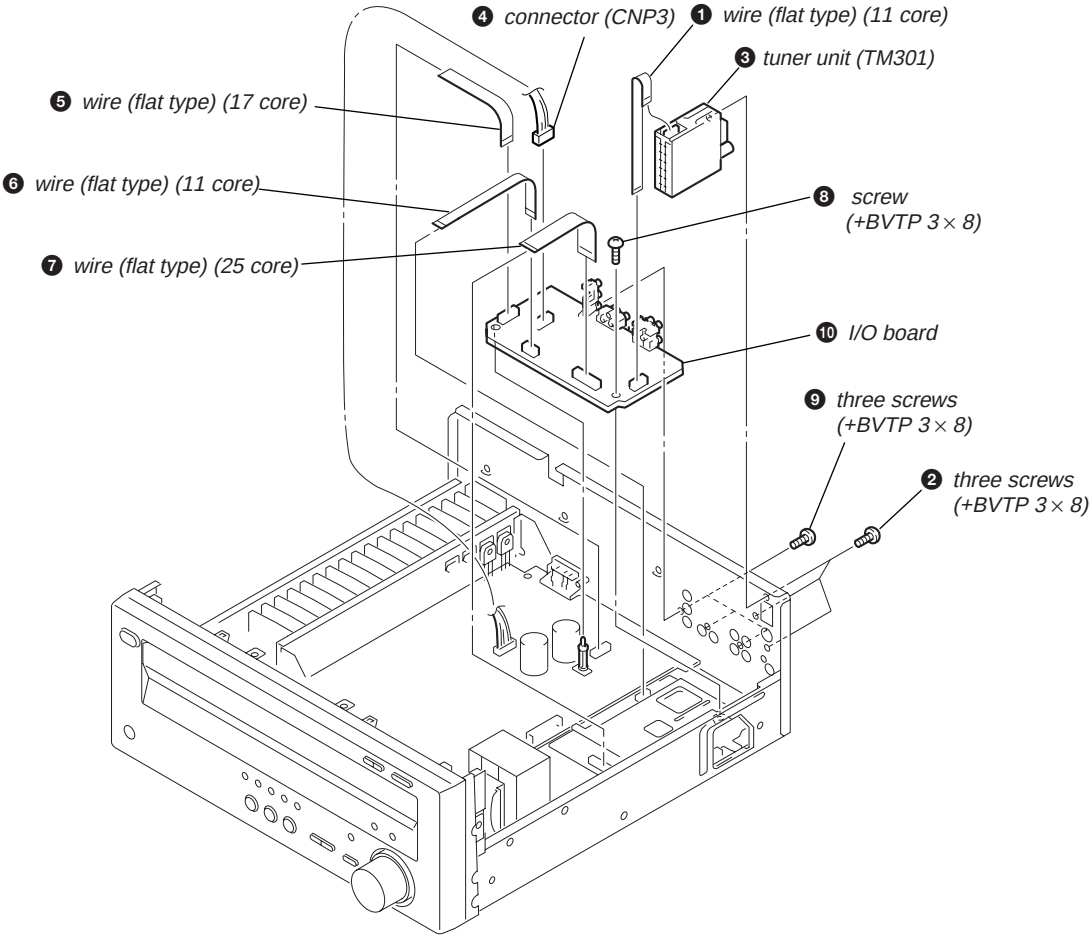

2-7. DMB03 Board

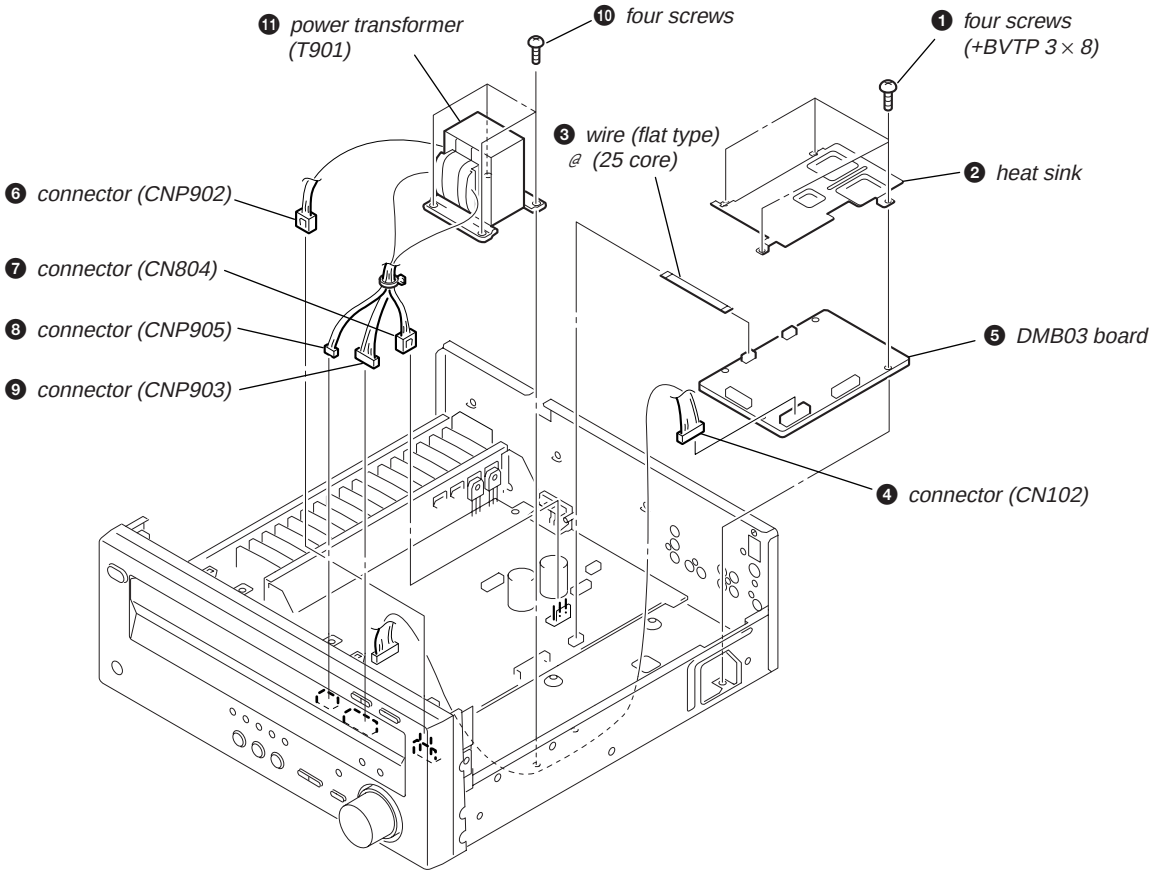

2-8. DC Fan (FAN1)

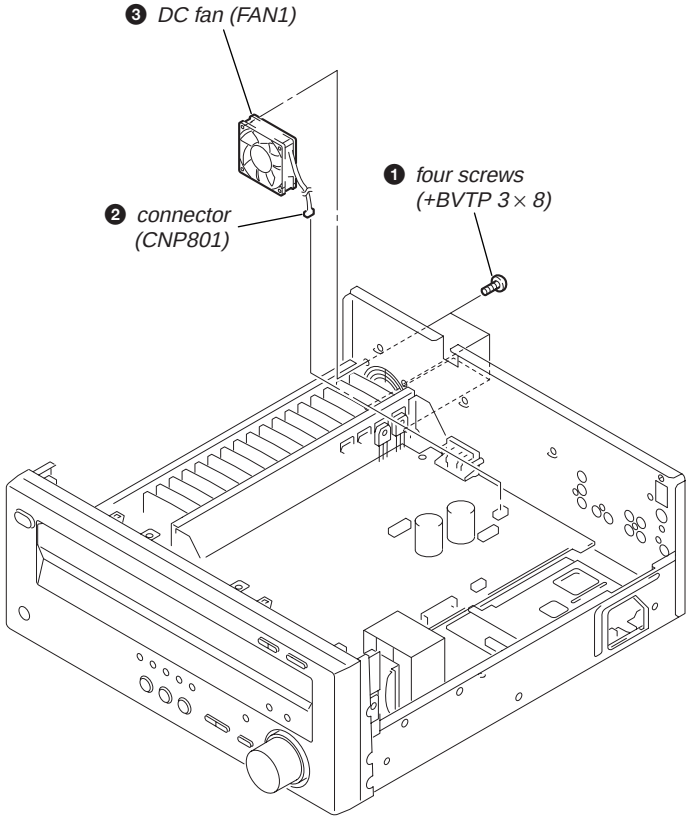

2-9. MAIN Board

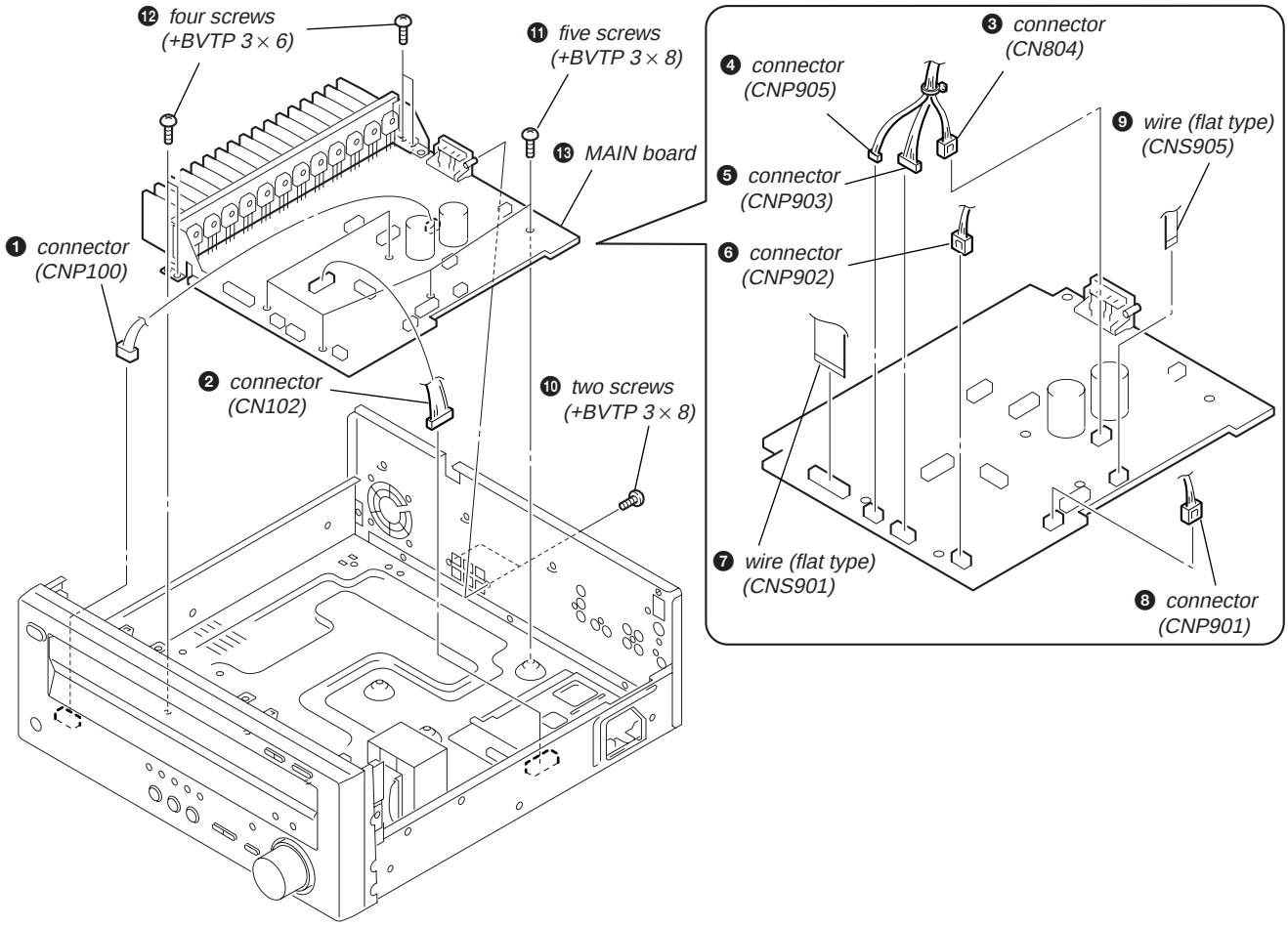

2-10. Table Assy

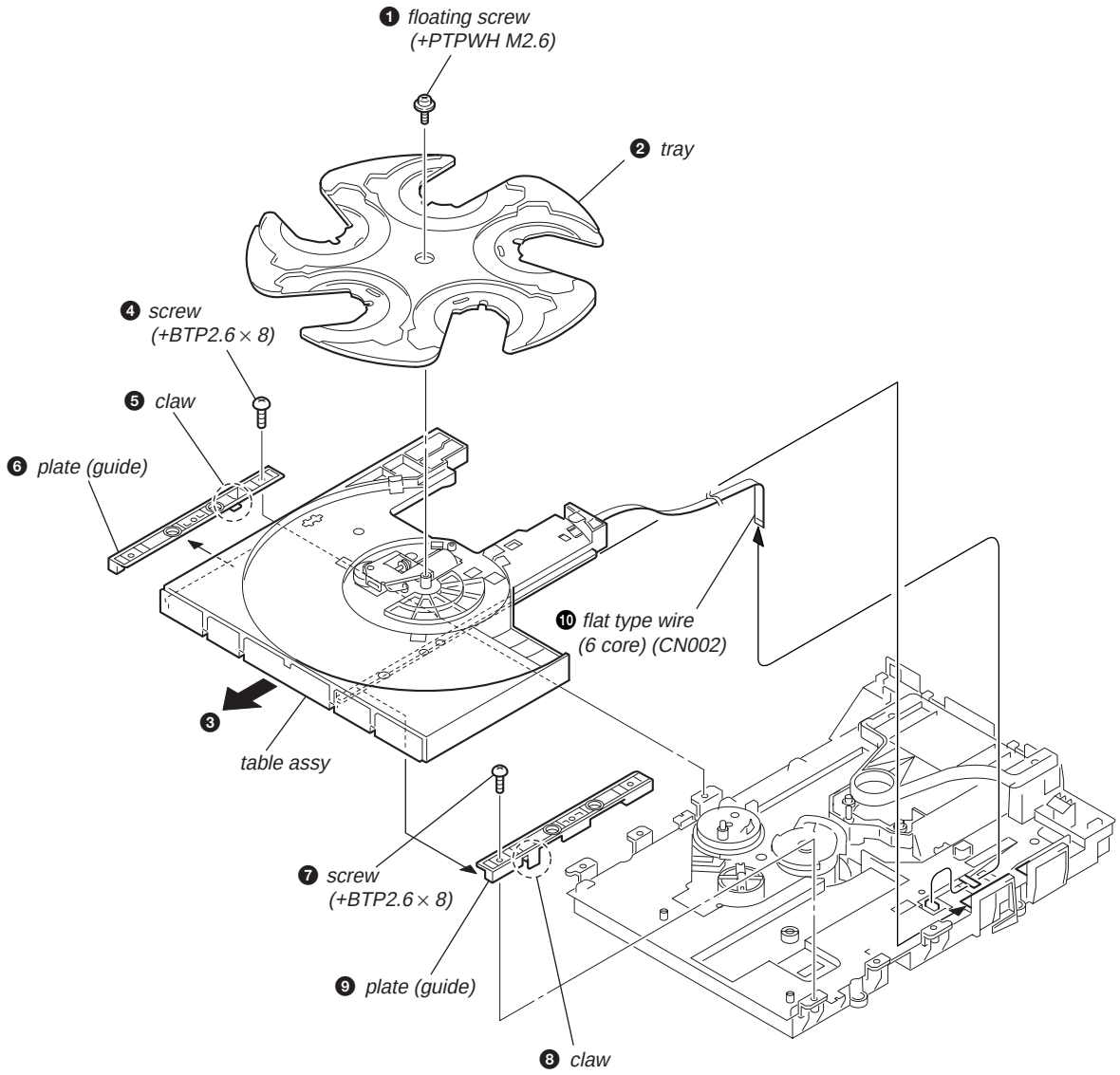

2-11. SE-130 Board

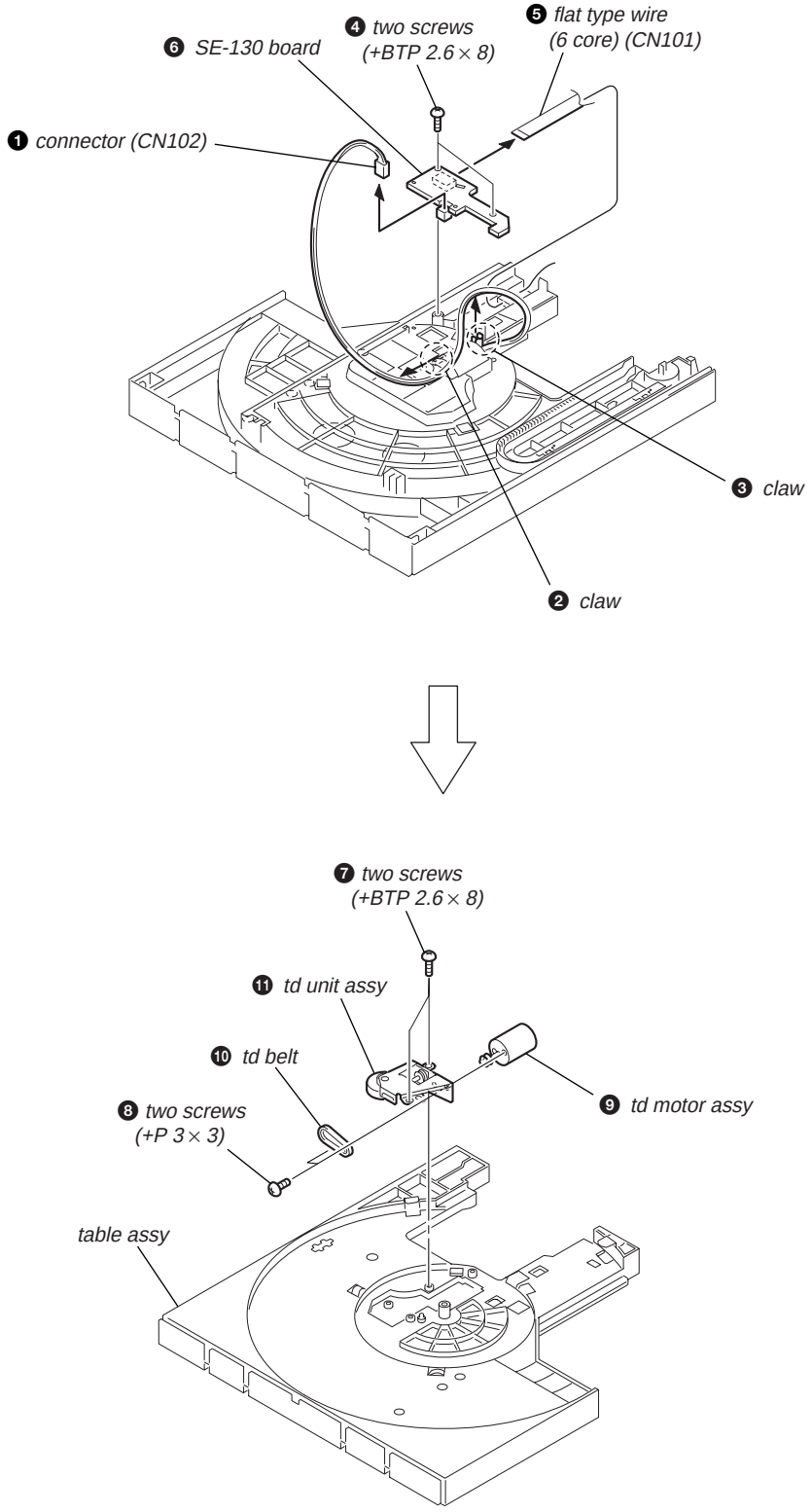

2-12. DC Motor (M001)

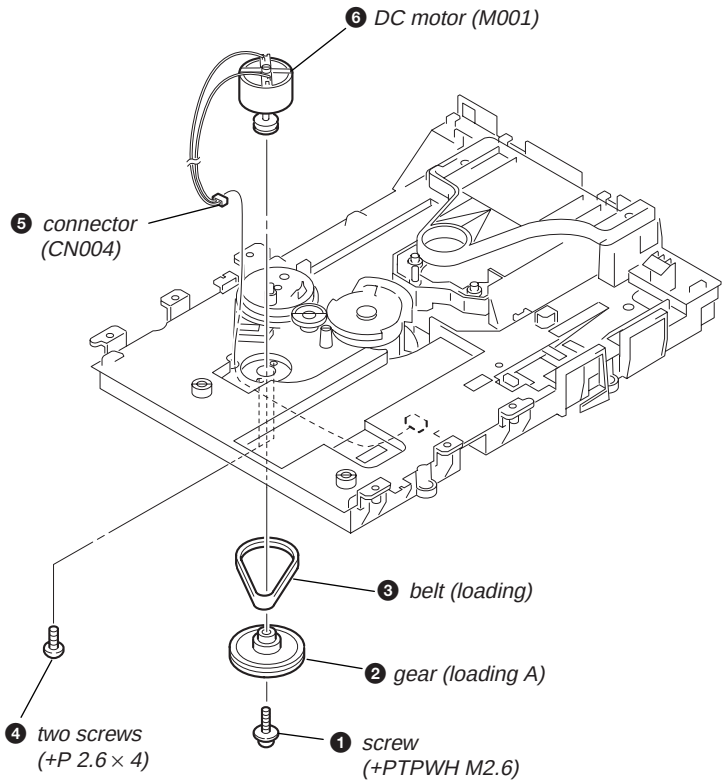

2-13. Pickup Unit Section

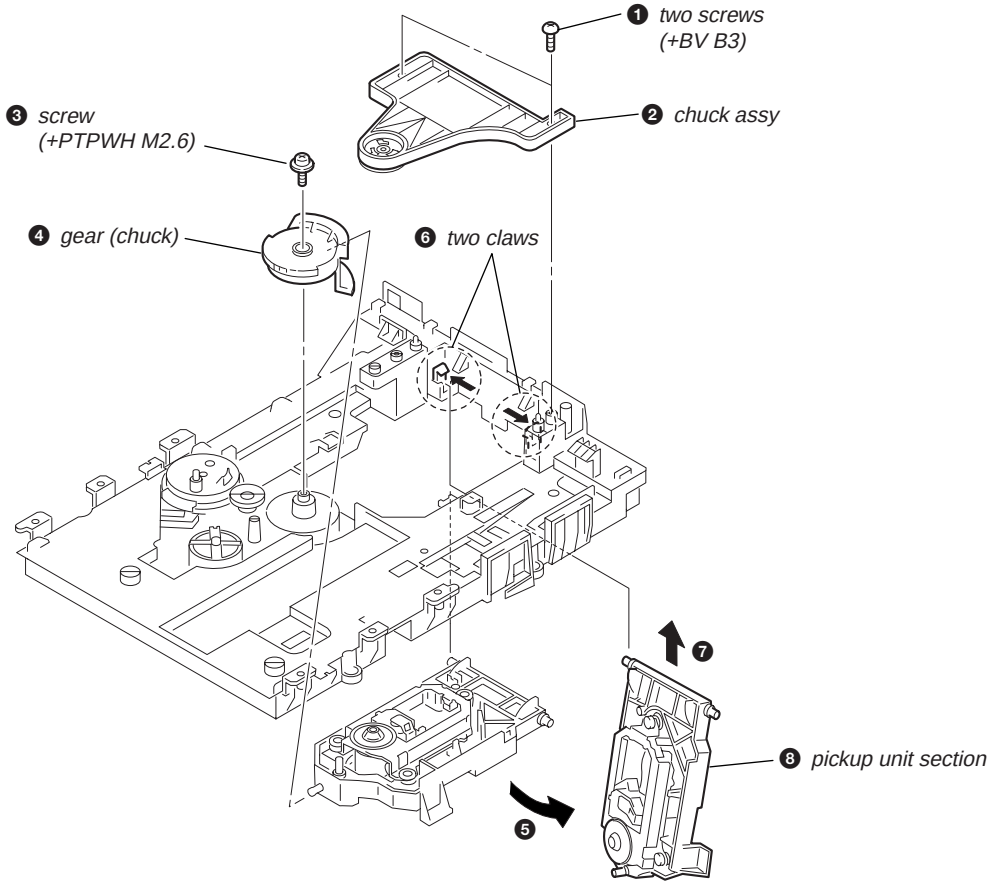

2-14. RF Board

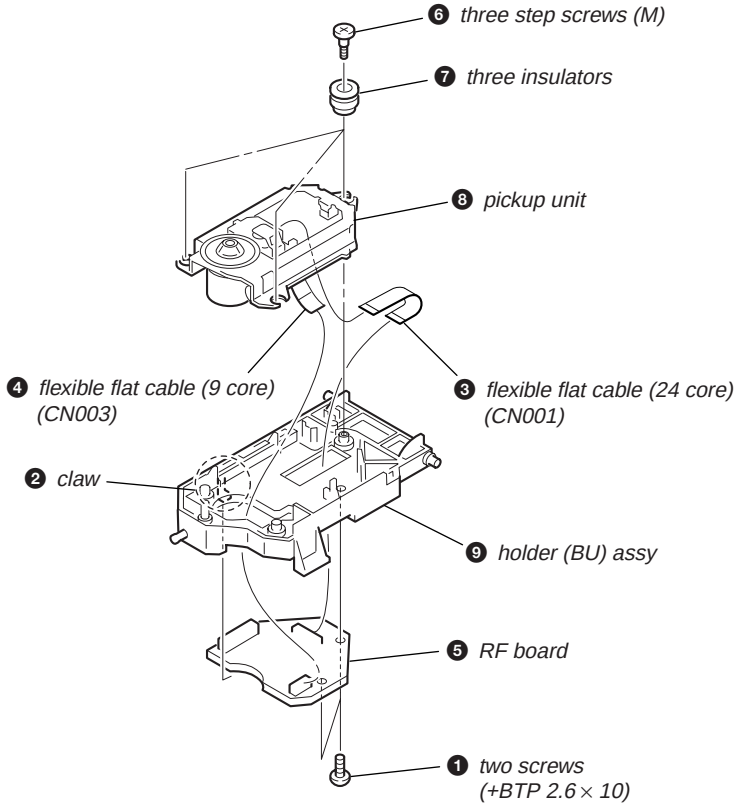
❻ three step screws (M)
❼ three insulators
❽ pickup unit
❹ flexible flat cable (9 core) (CN003)
❸ flexible flat cable (24 core) (CN001)
❷ claw
❾ holder (BU) assy
❺ RF board
❶ two screws (+BTP 2.6 × 10)

SECTION 3
TEST MODE

[Version Display Mode]

* The software version is displayed.

Procedure:

1. Press the I/⏻ button to turn the set on.
2. To enter the test mode, press the three buttons INPUT SELECTOR , ⏮ and DISC SELECT 1 simultaneously.
3. The message "VER #.##" is displayed for a while.

[Jog Volume Mode]

* Master Volume Check.

Procedure:

1. Press the I/⏻ button to turn the set on.
2. To enter the test mode, press the three buttons ■ , ⏭ and DISC SELECT 5 simultaneously.
3. The message "JOG 0" is displayed.
4. "JOG 0" value increases like +1, +2, +3 ... if rotating the MASTER VOLUME knob clockwise, or it decreases like -1, -2, -3, ... if rotating counter-clockwise.
5. To exit from this mode, press the I/⏻ button to turn the set off.

[Key Check Mode]

* Keyboard check.

Procedure:

1. Press the I/⏻ button to turn the set on.
2. To enter the test mode, press three buttons ■ , ⏭ and DISC SELECT 2 simultaneously.
3. In the key check mode, the fluorecent indicator displays "KEYNUM 0". Each time a button (without the I/⏻ button) is pressed, "KEYNUM 0" value increases. However, once a button is pressed, it is no longer taken into account.
4. To exit from this mode, press the I/⏻ button to turn the set off.

[Display Test Mode]

* Fluorescent segments and LEDs are tested when this test is activated.

Procedure:

1. Press the I/⏻ button to turn the set on.
2. To enter the test mode, press the three buttons ⏸ , ⏭ and DISC SELECT 3 simultaneously.
3. All segments turn on and all LEDs turn on. (MULTI CHANNEL DECODING LED (blue), DISC SELECT 1 to 5 LEDs (green, amber))

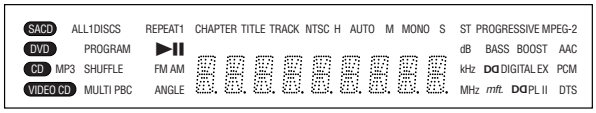

4. Press the ⏭ button and confirm the display and all LEDs turn on.

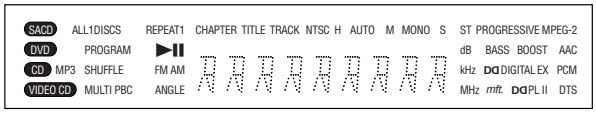

5. Press the ⏭ button and confirm the display and all LEDs turn off.

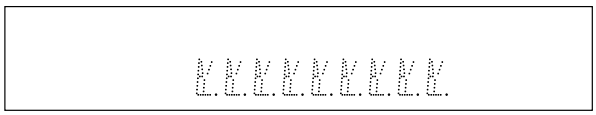

6. Press the ⏭ button and confirm all segments and all LEDs turn off.
7. Press the ⏭ button and the message "STRU *.**" is displayed.
8. Press the ⏭ button and the message "DVDU *.**" is displayed.
9. Press the ⏭ button and the message "F/EU *.**" is displayed.
10. Press the ⏭ button and the model name "HT-C800DP" is displayed.
11. Press the ⏭ button and the destination "DEST-***" is displayed.
12. Press the ⏭ button and the message "M_LED ON" is displayed. The MULTI CHANNEL DECODING LED (blue) is turned on.
13. Press the ⏭ button and the message "4-G 5-A" is displayed. The DISC SELECT 4 (green) LED and the DISC SELECT 5 (amber) LED are turned on.
14. Press the ⏭ button and the message "3-G 4-A" is displayed. The DISC SELECT 3 (green) LED and the DISC SELECT 4 (amber) LED are turned on.
15. Press the ⏭ button and the message "2-G 3-A" is displayed. The DISC SELECT 2 (green) LED and the DISC SELECT 3 (amber) LED are turned on.
16. Press the ⏭ button and the message "1-G 2-A" is displayed. The DISC SELECT 1 (green) LED and the DISC SELECT 2 (amber) LED are turned on.
17. Press the ⏭ button and the message "ALL GREEN" is displayed. The DISC SELECT 1 to 5 (green) LEDs are turned on.
18. Press the ⏭ button and the message "ALL AMBER" is displayed. The DISC SELECT 1 to 5 (amber) LEDs are turned on.
19. Press the ⏭ button. All segments turn on and all LEDs turn on just the same as 3.
20. By pressing the ⏮ button, these tests are performed in reverse order.
21. To exit from this mode, press the I/⏻ button to turn the set off.

[Disc Tray Lock]

The disc tray lock function for the antitheft of an demonstration disc in the store is equipped.

Setting Procedure:

1. Press the I/⏻ button to turn the set on.
2. Press two buttons of ■ and ⏏ simultaneously for five seconds.
3. The message "LOCKED" is displayed and the tray is locked.

Releasing Procedure:

1. Press two buttons of ■ and ⏏ simultaneously for five seconds again.
2. The message "UNLOCKED" is displayed and the tray is unlocked.

Note : When "LOCKED" is displayed, the tray lock is not released by turning power on/off with the I/⏻ button.

[All Clear Mode]

* The All Clear clears all data including preset data stored in the RAM to initial conditions. Execute this mode when returning the set to the customer.

Procedure:

1. Press the I/⏻ button to turn the set on.
2. To enter the test mode, press the three buttons ⏸, ⏮ and DISC SELECT 1 simultaneously.
3. The fluorescent indicator tube displays the message "ALL CLEAR" and the set is reset.

[DVD OSD TEST MODE]
[GENERAL DESCRIPTION]

The Test Mode allows you to make diagnosis and adjustment easily using the remote commander and monitor TV. The instructions, diagnostic results, etc. are given on the on-screen display (OSD).

[STARTING TEST MODE]

1. Press the [I/⏻] button to turn the power on, and set the function to DVD.
2. While pressing the [■] and [▶▶I] button, turn the [MASTER OLUME] knob clockwise to enter the test mode.
3. It displays "SERVICE IN" on the fluorescent indicator tube, and displays the Test Mode Menu on the monitor screen as follows. (At the bottom of the menu screen, the model name and revision number are displayed)

```
            Test Mode Menu

0. Syscon Diagnosis
1. Drive Auto Adjustment
2. Drive Manual Operation
3. Mecha Aging
4. Emergency History
5. Mecha Error History
6. Version Information
7. Video Level Adjustment
                    Exit: POWER Key
Model    :HT-C800DP   UC
Revision :x.xx
```

4. To execute each function, select the desired menu and press its number on the remote commander (RM-U800).
5. To release from test mode, press the [I/⏻] button and turn the power off.

[OPERATING TEST MODE]

0. SYSCON DIAGNOSIS

The same contents as board detail check by serial interface can be checked from the remote commander operation.
On the Test Mode Menu screen, press [10/0] key on the remote commander, and the following Check Menu will be displayed.

```
      ### Syscon Diagnosis ###

             Check Menu
0. Quit
1. All
2. Version
3. EEPROM
4. GPIO
5. SD Bus
6. Video
7. Audio
```

0-0. Quit

Quit the Syscon Diagnosis and return to the Test Mode Menu.

0-1. All (All items continuous check)

This menu checks all diagnostic items continuously. Normally, all items are checked successively one after another automatically unless an error is found, but at a certain item that requires judgment through a visual check to the result, the following screen is displayed for the key entry.

- *Example display*

```
      ### Syscon Diagnosis ###

           Diag All Check
            No.2 Version

         2-3. ROM Check Sum
Check Sum = A658



Press NEXT Key to Continue
Press PREV Key to Repeat
```

For the ROM Check, the check sum calculated by the Syscon is output, and therefore you must compare it with the specified value for confirmation.
Following the message, press the [▶▶I] button to go to the next item, or press the [I◀◀] button to repeat the same operation again.
To quit the diagnosis and return to Check Menu screen, press the [RETURN] key on the remote commander to display Check Menu.

- Error occurred

If an error occurred, the diagnosis is suspended and error is displayed. Press the [RETURN] key on the remote commander to quit the diagnosis, or press the [I◀◀] button to repeat the same check where an error occurred, or press the [▶▶I] button to continue the check from the item next to faulty item.

General Description of Checking Method

Selecting 2 and subsequent items calls the submenu screen of each item. And selecting 2 and subsequent items executes respective menus and outputs the results.
For the contents of each submenu, see "Check Items List" as below.

Check Items List:

- 0-2. Version
  - 0-2-1. All
  - 0-2-2. Revision
  - 0-2-3. ROM Check Sum
  - 0-2-4. Model Type
  - 0-2-5. Region
- 0-3. EEPROM Check
  - 0-3-1. Sampling Check
  - 0-3-2. Detail Check
- 0-4. GP I/O Check
- 0-5. SD Bus Check
- 0-6. Video Check
- 0-7. Audio Check

0-2. Version

0-2-2. Revision
The revision number of ROM (IC206) that the program for the DVD system processor (IC207) is stored.

0-2-3. ROM Check Sum
The revision number of ROM (IC206) that the program for the DVD system processor (IC207) is stored.

0-2-4. Model Type
Model name is displayed. (HT-C800DP)

0-2-5. Region
Model destination code is displayed. (2 digits number)

0-3. EEPROM Check

0-3-1. Sampling Check
EEPROM check at every 64 words.
It compares read data with write data of each address. When there are discrepancies between two data, it displays error.

0-3-2. Detail Check
EEPROM check at every 1 word.
It compares read data with write data of each address. When there are discrepancies between two data, it displays error.

0-4. GP I/O Check

Pull up/down setting check of the DVD system processor (IC207) pin 150, 151 and 154 (for clock setting port).

0-5. SD Bus Check

SD bus data check between DVD decoder (IC701) and D-RAM (IC706).

0-6. Video Check

Output the color bars for video level adjustment.

0-7. Audio Check

Output the test signal (1kHz sine wave) for 5.1 CH test.

1. DRIVE AUTO ADJUSTMENT

On the Test Mode Menu screen, press the [1] key on the remote commander, and the Adjustment Menu will be displayed.

```
## Drive Auto Adjustment ##
      Adjustment Menu

0. ALL
1. DVD-SL
2. CD
3. DVD-DL

                    Exit: RETURN
```

Normally, [10/0] is selected to adjust DVD (single layer), CD and DVD (dual layer) in this order. But, individual items can be adjusted for the case where adjustment is suspended due to an error. In this mode, the adjustment can be made easily through the operation following the message displayed on the screen.
The disc used for adjustment must be the one specified for adjustment.

1-0. ALL

Press the [10/0] key on the remote commander, and the servo set data in EEPROM will be initialized. Then, 1. DVD-SL disc, 2. CD disc and 3. DVD-DL disc are adjusted in this order.
Each time one disc was adjusted, it is ejected. Replace it with the specified disc following the message. You can finish the adjustment by pressing the [RETURN] button on the remote commander.

Note: During adjustment of each disc, the measurement for disc type judgment is made. As automatic adjustment does not judge the disc type unlike conventional models, take care not to insert wrong type discs. Also, do not give a shock during adjustment.

1-1. DVD-SL (single layer)

Test disc: TDV-520CSO (DVD-SL) (Part No. J-2501-236-A)

Press the [1] key on the remote commander and insert a DVD single layer disc following the message. Then the adjustment will be made through the steps below, then adjusted values will be written to the EEPROM.

DVD Single Layer Disc Adjustment Steps:

1. Sled tilt reset
2. Disc check memory SL
3. Wait 300 msec
4. Set disc type SL
5. LD on
6. Spindle start
7. Wait 1 sec
8. Focus servo on 0
9. Auto track offset adjust
10. CLVA on
11. Wait 500 msec
12. Tracking on
13. Wait 1 sec
14. Sled on
15. Check CLV on
16. Auto LFO adjust
17. Auto focus offset adjust
18. Auto tilt position adjust
19. Auto focus gain adjust
20. Auto focus offset adjust
21. EQ boost adjust
22. Auto loop filter offset adjust
23. Auto track gain adjust

Search Check

24. 32 track jump forward
25. 32 track jump reverse
26. 500 track jump forward
27. 500 track jump reverse

28. All servo stop
29. EEP copy loop filter offset

1-2. CD

Test disc: LIV-P01 (CD) (Part No. 4-999-032-01)

Press the [2] key on the remote commander and insert a CD disc following the message. Then the adjustment will be made through the steps below, then adjusted values will be written to the EEPROM.

CD Adjustment Steps

1. Sled tilt rest
2. Disc check memory CD
3. Wait 500 msec
4. Set disc type CD
5. LD on
6. Spindle start
7. Wait 500 msec
8. Focus servo on 0
9. Auto track offset adjust
10. CLVA on
11. Wait 500 msec
12. Tracking on
13. (TC display start)
14. Wait 1 sec
15. Jitter display start
16. Sled ON
17. Check CLV on
18. Auto loop filter offset adjust
19. Auto focus offset adjust
20. Auto focus gain adjust

21. Auto focus offset adjust
22. EQ boost adjust
23. Auto LFO Adjust
24. Auto track gain adjust

Search Check

25. 32Tj forward
26. 32Tj reverse
27. 500Tj forward
28. 500Tj reverse

29. All servo stop

1-3. DVD-DL (dual layer)

Test disc: TDV-540C (DVD-DL) (Part No. J-2501-235-A)

Press the [3] key on the remote commander and insert a DVD dual layer disc following the message. Then the adjustment will be made through the steps below, then adjusted values will be written to the EEPROM.

DVD Dual Layer Disc Adjustment Steps:

1. Sled tilt reset
2. Disc check memory DL
3. Wait 500 msec
4. Set disc type DL
5. LD on
6. Spindle start
7. Wait 1 sec

Layer 1 Adjust

8. Focus servo on 0
9. Auto track offset adjust
10. CLVA on
11. Wait 500 msec
12. Tracking on
13. Wait 500 msec
14. Sled on
15. Check CLV lock
16. Auto loop filter offset adjust, Auto focus adjust
17. Auto focus gain adjust
18. Auto focus offset adjust
19. EQ boost adjust
20. Auto loop filter offset adjust
21. Auto Track Gain Adjust

Search Check

22. 32 track jump forward
23. 32 track jump reverse
24. 500 track jump forward
25. 500 track jump reverse

Layer 0 Adjust

26. Focus jump (L1 ⟶ L0)
27. Auto track offset adjust L0
28. CLVA on
29. Wait 500 msec
30. Tracking on
31. Wait 500 msec
32. Sled on
33. Check CLV lock
34. Auto focus filter offset adjust
35. Auto Focus Adjust
36. Auto focus gain adjust
37. Auto focus offset adjust
38. EQ boost adjust
39. Auto Loop Filter Offset
40. Auto track gain adjust

Search Check

41. 32 track jump forward
42. 32 track jump reverse
43. 500 track jump forward
44. 500 track jump reverse

Layer Jump Check

45. Layer jump (L0 ? L1)
46. Layer jump (L1 ? L0)

47. All servo stop

2. DRIVE MANUAL OPERATION

Note: This mode is used for design, and not used in service fundamentally.

On the Test Mode Menu screen, press the [2] key on the remote commander, and the Operation Menu will be displayed. For the manual operation, each servo on/off control and adjustment can be executed manually.

```
## Drive Manual Operation ##
        Operation Menu
1. Disc Type
2. Servo Control
3. Track/Layer Jump
4. Non EEPROM Write Adjust
5. EEPROM Write Adjust
6. Memory Check
7. Disc Check Memory
8. Error Rate Display
9. SACD Water Mark

                    Exit: RETURN
```

In using the manual operation menu, take care of the following points. These commands do not provide protection, thus requiring correct operation. The sector address or time code field is displayed when a disc is loaded.

Note:
1. Set correctly the disc type to be used on the Disc Type screen.
2. In case of an alarm, immediately press the [■] button to stop the servo operation, and press the [I/⏻] button to turn the power off.

Basic operation:
(controllable from front panel or remote commander)

[I/⏻]	: Power OFF (release the Test Mode)
[■]	: Servo stop
[⏏]	: Stop and eject/Loading
[RETURN]	: Return to Operation Menu or Test Mode Menu
[⏮], [⏭]	: Transition between sub modes of menu
[1] to [9], [10/0]	: Selection of menu items
Cursor [↓]/[↑]	: Increase/Decrease in manually adjusted value

2-1. Disc Type

```
                Disc Type

            Disc Type Select

  1. Disc Type Auto Check
  2. Set Disc Type DVD
  3. Set Disc Type CD
  4. Set Disc Type Hybrid



                          Exit: RETURN
```

2-1-1. Disc Type Auto Check

1) Press the [1] key on the remote commander to display the Disc Type Auto Check screen.
2) Insert a disc and press the [ENTER] key on the remote commander.
3) It judges the type of inserted disc automatically and displays the disc type and so on as below.

```
          Disc Type Auto Check

  Disc Type       xx
  Layer           xx
  Mirr Time       xx
  Mirr Count      xx
  FZC Count       xx
  PI Reference    xx
  PI Peak         xx

  ENTER.Execute

                          Exit: RETURN
```

Disc Type : CD, DVD or Hybrid (SACD)
Layer : SINGLE, DUAL or HYBRID
Mirr Time : Mirror time of between disc surface and record surface when disc type judgment. (hexadecimal number)
Mirr Count : The number of times which mirror counts between disc surface and record surface when disc type judging.
FZC Count : The number of times which focus zero cross points of each layer when lens down.
PI Reference : The average of PI reference voltage. (hexadecimal number)
PI Peak : PI peak level voltage. It performs only when disc type judgment is successful. (hexadecimal number)

2-1-2. Disc Type DVD

It sets up so that it may judge as a disc type of specification of the disc with which the set was inserted.

[1]: DVD single layer disc (12 cm)
[2]: DVD dual layer disc (0 layer, 12 cm)
[3]: DVD dual layer disc (1 layer, 12 cm)
[4]: DVD-RW disc (12 cm)
[5]: DVD single layer disc (8 cm)
[6]: DVD dual layer disc (0 layer, 8 cm)
[7]: DVD dual layer disc (1 layer, 8 cm)
[8]: DVD-RW disc (8 cm)

2-1-3. Disc Type CD

It sets up so that it may judge as a disc type of specification of the disc with which the set was inserted.

[1]: CD disc (normal speed, 12 cm)
[2]: CD disc (double speed, 12 cm)
[3]: CD disc (normal speed, 8 cm)
[4]: CD disc (double speed, 8 cm)
[5]: CD-RW disc (normal speed, 12 cm)
[6]: CD-RW disc (double speed, 12 cm)
[7]: CD-RW disc (normal speed, 8 cm)
[8]: CD-RW disc (double speed, 8 cm)

2-1-4. Disc Type Hybrid

It sets up so that it may judge as a disc type of specification of the disc with which the set was inserted.

[1]: SACD Hybrid disc (SACD layer, 12 cm)
[2]: SACD Hybrid disc (CD layer, normal speed, 12 cm)
[3]: SACD Hybrid disc (CD layer, double speed, 12 cm)
[4]: SACD Hybrid disc (SACD layer, 8 cm)
[5]: SACD Hybrid disc (CD layer, normal speed, 8 cm)
[6]: SACD Hybrid disc (CD layer, double speed, 8 cm)

2-2. Servo Control

Note: Be sure to perform the disc type setup before performing this item.

```
            Servo Control
  1.LD          off R.Sled FWD
  2.Focus       off L.Sled REV
  3.SPDL        off U.Sled Reset
  4.CLVA        off D.Sled Limit
  5.Trk.        off
  6.Sled        off
  7.Fcs.Srch    off
  8.Fcs.OppL    off

  0.All Servo Off

                          Exit: RETURN
```

On this screen, the servo on/off control necessary for replay is executed. Normally, turn on each servo from 1 sequentially and when CLVA is turned on, the usual trace mode becomes active. In the trace mode, DVD sector address or CD time code is displayed. This is not displayed where the spindle is not locked.
The spindle could run overriding the control if the spindle system is faulty or RF is not present. In such a case, do not operate CLVA.

[1] LD : Turn on/off the laser.
[2] Focus : Search the focus and turn on the focus.
[3] SPDL : Turn on/off the spindle.
[4] CLVA : Turn on/off normal servo of spindle servo.
[5] Trk. : Turn on/off the tracking servo.
[6] Sled : Turn on/off the sled servo.
[7] FCS. Srch : Turn on/off the focus search.
[8] FCS. OppL : Turn on/off the focus search to another (opposite) layer of designated layer in Disc Type setting. (dual layer disc only)
[10/0] : All servo off.
[R] Sled FWD (right cursor) : Move the sled forward.
[L] Sled REV (left cursor) : Move the sled reverse.
[U] Sled FWD (up cursor) : Reset the sled.
[D] Sled REV (down cursor) : Limit in the sled.

2-3. Track/Layer Jump

```
          Track/Layer Jump
1.  1Tj        FWD R.Lj L0>L1
2.  1Tj        REV L.Lj L1>L0
3.500Tj Fine   FWD U.Fj L0>L1
4.500Tj Fine   REV D.Fj L1>L0
5.10kTj Dirc   FWD
6.10kTj Dirc   REV
7.20kTj Dirc   FWD
8.20kTj Dirc   REV

0. All Servo Off

                        Exit: RETURN
```

On this screen, track jump, etc. can be performed. Only for the DVD dual layer disc, the focus jump and layer jump are displayed in the right field

- [1] 1Tj FWD : 1 track jump forward.
- [2] 1Tj REV : 1 track jump reverse.
- [3] 500Tj FWD: 500 track jump (fine search)forward.
- [4] 500Tj REV : 500 track jump (fine search) reverse.
- [5] 10kTj FWD: 10k track jump (direct search) forward.
- [6] 10kTj REV : 10k track jump (direct search) reverse.
- [7] 20kTj FWD: 20k track jump (direct search) forward.
- [8] 20kTj REV : 20k track jump (direct search) reverse.
- [10/0] : All servo off.

2-4. Non EEPROM Write Adjust

```
      Non EEPROM Write Adjust

1. Focus  Offset
2. Focus  Gain
3. Trk.   Offset Coarse
4. Trk.   Offset Fine
5. Trk.   Gain
6. EQ     Boost

0.All Servo Off


                        Exit: RETURN
```

On this screen, each item can be adjusted manually. Select the desired number [1] to [10/0] from the remote commander, and current setting for the selected item will be displayed, then increase or decrease numeric value with the [↑] key or [↓] key. This value is stored in the EEPROM. If CLV has been applied, the jitter is displayed for reference for the adjustment.

- [1] Focus Offset : Adjusts focus offset.
- [2] Focus Gain : Adjusts focus gain.
- [3] TRK. Offset : Adjusts tracking offset of the RF amp (IC001) side.
- [4] TRK. Offset : Adjusts tracking offset of the DSP (IC401) side.
- [5] TRK. Gain : Adjusts track gain.
- [6] EQ Boost : Adjusts amount of boost of equalizer.
- [10/0] : All servo off.

2-5. EEPROM Write Adjust

```
        EEPROM Write Adjust

1. Focus  Offset
2. Focus  Gain
3. Trk.   Offset Coarse
4. ──────
5. Trk.   Gain
6. EQ     Boost

0.All Servo Off


                        Exit: RETURN
```

On this screen, each item can be adjusted automatically. Select the desired number [1] to [10/0] from the remote commander, and selected item is adjusted automatically.

- [1] Focus Offset : Adjusts focus offset.
- [2] Focus Gain : Adjusts focus gain.
- [3] TRK. Offset : Adjusts tracking offset of the RF amp (IC001) side.
- [5] TRK. Gain : Adjusts track gain.
- [6] EQ Boost : Adjusts amount of boost of equalizer.
- [10/0] : All servo off.

2-6. Memory Check

Display images are shown as follows, and all two screens are able to switch by the [↑] key (UP) or [↓] key (DW).

```
EEPROM Data 1/2   CD  SL  L0  L1
Focus  Gain       xx  xx  xx  xx
Trk.   Gain       xx  xx  xx  xx
Focus  Offset     xx  xx  xx  xx
Trk.   Offset     xx  xx  xx  xx
EQ.    Boost      xx  xx  xx  xx
PI     Level      xx  xx  --  --
Fcs. Balance      --  xx  --  --
Jitter            xx  xx  xx  xx
Mirror Time       xx  xx  xx  --
FE Level          --  xx  --  --
Traverse Lv1.     --  xx  --  --
Next:DW Default:CLR    Exit:RET
```

```
EEPROM Data 2/2    CDRW DVDRW
Focus  Gain          xx   xx
Trk.   Gain          xx   xx
Focus  Offset        xx   xx
Trk.   Offset        xx   xx
EQ.    Boost         xx   xx




Next:UP Default:CLR        Exit:RET
```

On this screen, current servo adjusted data stored in the EEPROM are displayed. The adjusted data are initialized by pressing the [CLEAR] key, but be careful that they are not recoverable after initialization.

Before clearing the adjusted data, make a note of the set data. This screen will also appear if [0]-All is selected in the Drive Auto Adjustment. In this case, default setting cannot be made.

2-7. Disc Check Memory

```
          Disc Check Memory

  1. SL Disc check
  2. SL Disc check
  3. SL Disc check

                          Exit: RETURN
```

On this screen, measure the mirror time of chucked disc, and write to the EEPROM.

2-8. Error Rate Display

```
          Error Rate Display
              ERR       Address
 C1 Err   Now xxxxxxxx xxxxxxxx
          Max xxxxxxxx xxxxxxxx
          Avg xxxxxxxx
 C2 Err   Now xxxxxxxx xxxxxxxx
          Max xxxxxxxx xxxxxxxx
          Avg xxxxxxxx

  Start: ENTER          Stop: Return
```

On this screen, measure and display the error rate.

3. MECHA AGING

On the Test Mode Menu screen, selecting [3] executes the aging of the mechanism deck.

```
      ### Aging Test MENU ###
   ** Pls use over 40min. CD **
          Operation Menu

 1. Open/Close Test

                          Exit: RETURN
```

1) On the Aging Test MENU screen, press the [1] key on the remote commander to display the Open/Close Test screen.
2) Insert discs and press the [ENTER] key on the remote commander.
3) It starts the aging.
   During aging, the disc number, operating status and repeat cycle are displayed. Aging can be aborted at any time by pressing the [■] key. After the operation is stopped, press the [■] key or [RETURN] key aging to return to the Aging Test MENU.

4. EMERGENCY HISTORY

On the Test Mode Menu screen, selecting [4] displays the information such as servo emergency history.
The history information from last 1 up to 10 can be scrolled with the [↑] key or [↓] key. Also, specific information can be displayed by directly entering that number with ten keys.

```
        ### EMG. History ###

   Laser Hours     CD   xxxxhxxm
                   DVD  xxxxhxxm

 a.   bb xx xx xx  xx xx xx xx
      xx xx xx xx  xx xx xx xx

 a.   bb xx xx xx  xx xx xx xx
      xx xx xx xx  xx xx xx xx

    Select:1-9        Scroll:UP/DOWN
   (1.Latest EMG.)      Exit: RETURN
```

xxxxhxxm : The laser on total hours. Data below minutes are omitted.
a. : Error number.
bb : Error code.
xx : Not used.

- Clearing History Information

Clearing laser hours:
Press the [DVD DISPLAY] and [CLEAR] keys in this order.
Then both CD and DVD data are cleared.

Clearing emergency history:
Press the [DVD TOP MENU] and [CLEAR] keys in this order.

Initializing set up data:
Press [DVD MENU] and [CLEAR] keys in this order.
The data have been initialized when "Set Up Initialized" message is displayed. The EMG. History screen will be restored soon.

- Code list of Emergency History

10: Communication to RF AMP (IC001) failed.
11: Each servo for focus, tracking, and spindle is unlocked.
12: Check sum error of EEPROM (IC204).
14: Communication to servo DSP (IC509) failed, or servo DSP (IC509) is faulty.
15: Communication to DVD decoder (IC701) failed, or DVD decoder (IC701) is faulty.
20: Initialization of sled servo failed. It is not placed in the initial position.
23: Sled servo operation error.
24: Made a request to move the sled servo to wrong position.
30: Tracking balance adjustment error.
31: Tracking gain adjustment error.
33: Focus bias adjustment error.
34: Focus gain adjustment error.
35: Equalizer adjustment error.
40: Focus servo does not operate.
41: With a DVD dual layer disc, focus jump failed.
50: CLV (spindle) servo does not operate.
51: Spindle does not stop.
60: Made a request to seek nonexistent address.
61: Seek error of retry more than regulated times.
70: Control data could not be read.
80: Disc reading failed.

5. MECHA ERROR HISTORY

On the Test Mode Menu screen, selecting [5] displays the information of mechanism deck error history.
The history information from last 1 up to 8 can be scrolled with the [↑] key or [↓] key. Also, specific information can be displayed by directly entering that number with ten keys.

```
    ### Mecha Error History ###

  1. aa bb cc xx xx xx xx xx
  2. aa bb cc xx xx xx xx xx
  3. aa bb cc xx xx xx xx xx
  4. aa bb cc xx xx xx xx xx
  5. aa bb cc xx xx xx xx xx
  6. aa bb cc xx xx xx xx xx
  7. aa bb cc xx xx xx xx xx
  8. aa bb cc xx xx xx xx xx

                     Scroll:UP/DOWN
(1.Latest Err.)        Exit: RETURN
```

aa: Initialization is completed or not.
FF : Complete.
other number : Not complete.

bb: Operating status of mechanism deck at an error occurred. (lod sq jcp)
00 : Initializing.
10 to 15 : Open operating.
16 to 19 : Kicking cause open failed.
1A to 1F : Open operating.
20 to 27 : Complete the open operation.
28 : No disc and complete the open operation.
29 to 2F : Complete the open operation.
30 to 3F : Close requesting.
40 to 4F : Open requesting.
50 to 5F : Close operating.
60 to 6F : Complete the chucking operation.
80 to 8F : Complete the release operation. (BU is home position)
90 to 9F : BU down operating.
A0 to AF : Opening/closing the shutter. Or stationary state in open/close the shutter is enablement.
B0 to BF : BU up requesting.
C0 to CF : BU down requesting.
D0 to DF : BU upping.
E0 to EF : No disc checking in disc loading.

cc: Operating status of mechanism deck at an error occurred. (lod oq jcp)
00 : Complete the operation.
10 to 1F : Open operating.
20 to 2F : Close operating.
30 to 3F : Release operating.
60 to 6F : Chucking operating.
70 to 7F : Kicking operating.
80 to 8F : Returning the BU to home position. (after kicking)

6. VERSION INFORMATION

On the Test Mode Menu screen, selecting [6] displays the ROM version and region code.
The parenthesized hexadecimal number in version field is checksum value of ROM.

```
    ## Version Information ##

IF con.   Ver.x. xx

SYScon.   Ver.x. xx  (xxxx)
      Model      HT-C800DP
      Region     0x
      Config     xxxxxxxx

Front End Ver.x.xx


                      Exit: RETURN
```

IF con. : The version of system controller (IC901) on the MAIN board.
SYScon. : The version of DVD system processor (IC207).
Front End: The version of mechanism controller (IC901).

7. VIDEO LEVEL ADJUSTMENT

On the Test Mode Menu screen, selecting [7] displays color bars for video level adjustment. During display of color bars, OSD disappears but the menu screen will be restored if pressing the [RETURN] key.

SECTION 4
DIAGRAMS

4-1. Circuit Board Location

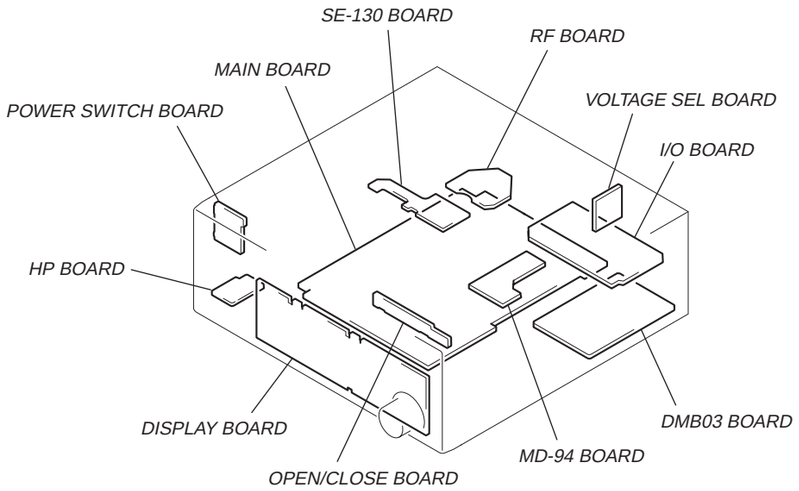

THIS NOTE IS COMMON FOR PRINTED WIRING BOARDS AND SCHEMATIC DIAGRAMS.
(In addition to this, the necessary note is printed in each block.)

For schematic diagrams.

Note:
- All capacitors are in µF unless otherwise noted. pF: µµF 50 WV or less are not indicated except for electrolytics and tantalums.
- All resistors are in Ω and 1/4 W or less unless otherwise specified.
- △ : internal component.
- ▭ : panel designation.

Note:	**Note:**
The components identified by mark ⚠ or dotted line with mark ⚠ are critical for safety. Replace only with part number specified.	Les composants identifiés par une marque ⚠ sont critiques pour la sécurité. Ne les remplacer que par une piéce portant le numéro spécifié.

- ▬▬ : B+ Line.
- ▬ ▬ ▬ : B– Line.
- Voltages and waveforms are dc with respect to ground under no-signal (detuned) conditions.
- Voltages and waveforms are dc with respect to ground in service mode.
  ∗ : Impossible to measure
- Waveforms are taken with a oscilloscope.
  Voltage variations may be noted due to normal production tolerances.
  no mark : STOP
- Circled numbers refer to waveforms.
- Signal path.
  ⇨ : AUDIO
  : CD PLAY
  : DVD PLAY
  : TUNER
  : VIDEO
  : COMPONENT VIDEO
  : VIDEO/TV AUDIO IN
  : SACD PLAY
- Abbreviation
  CND : Canadian model.
  E51 : Chilean and peruvian models.
  MX : Mexican model.

For printed wiring boards.

Note:
- ○——— : parts extracted from the component side.
- ○ : Through hole.
- ▒▒▒ : Pattern from the side which enables seeing.

(The other layers' patterns are not indicated.)

Caution:	
Pattern face side: (SIDE A)	Parts on the pattern face side seen from the pattern face are indicated.
Parts face side: (SIDE B)	Parts on the parts face side seen from the parts face are indicated.

- **Indication of transistor**

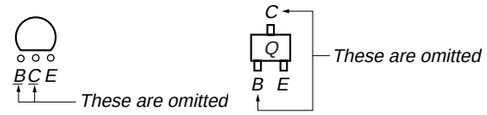

4-2. Block Diagrams — RF SERVO Section —

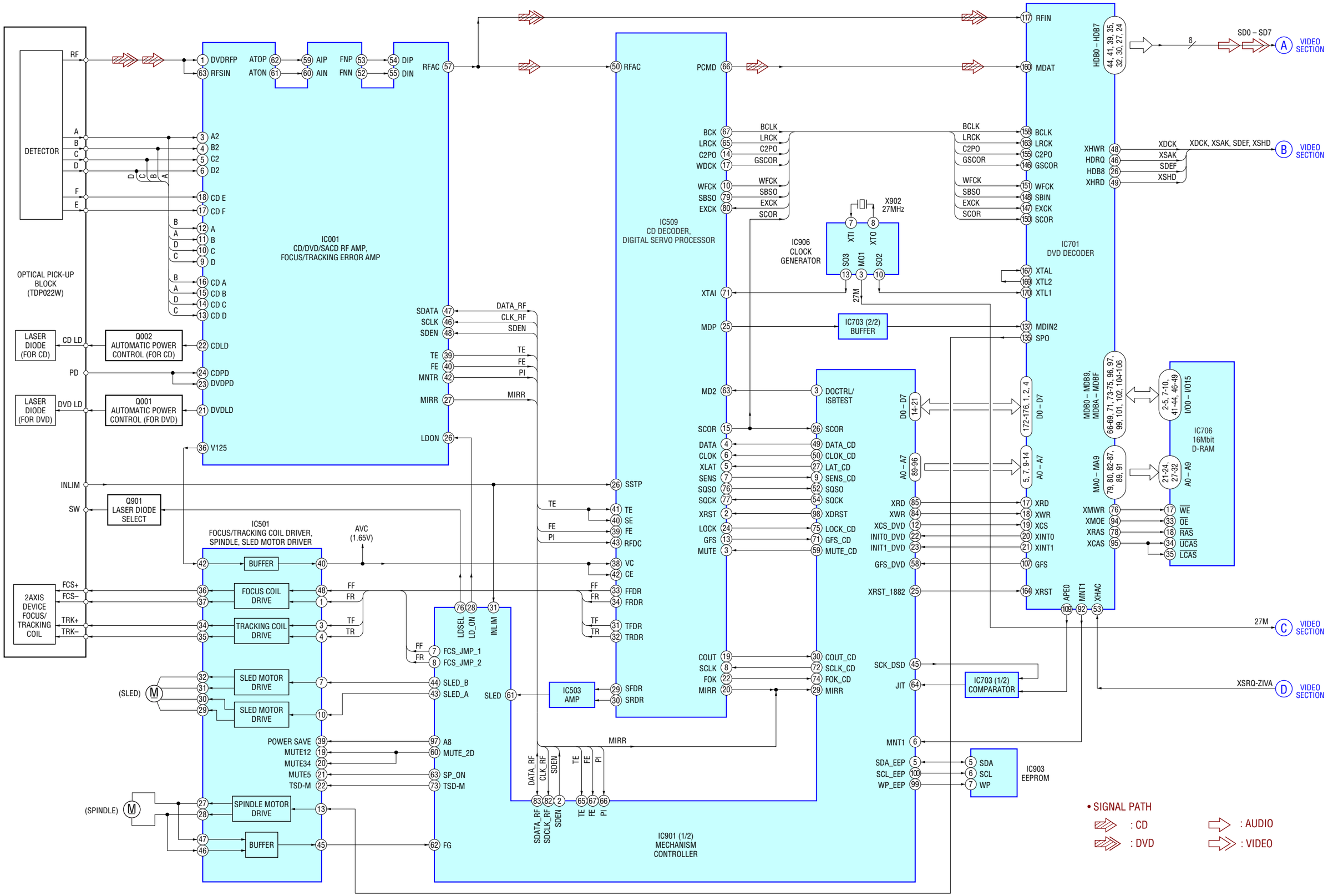

— VIDEO Section —

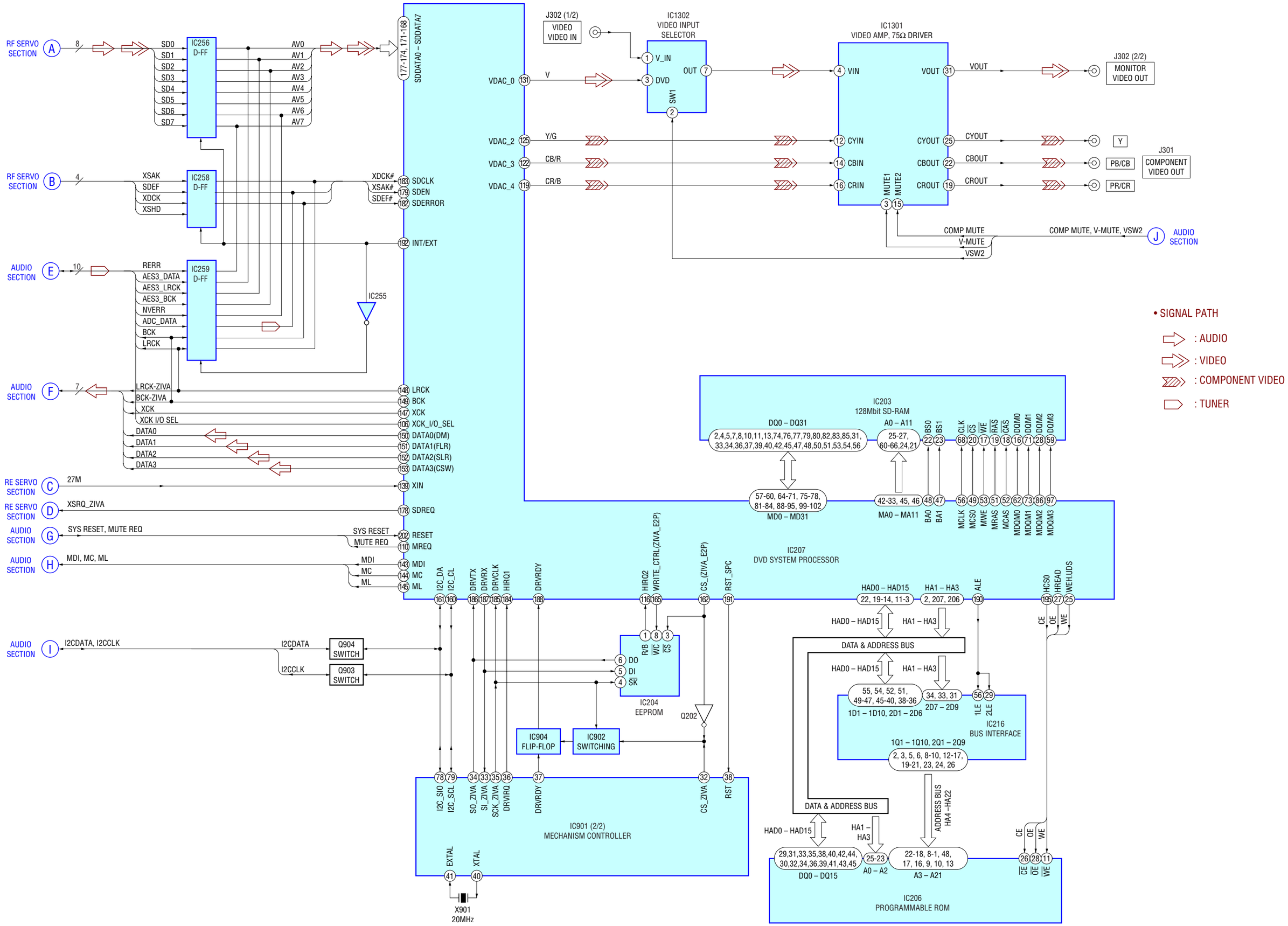

— AUDIO Section —

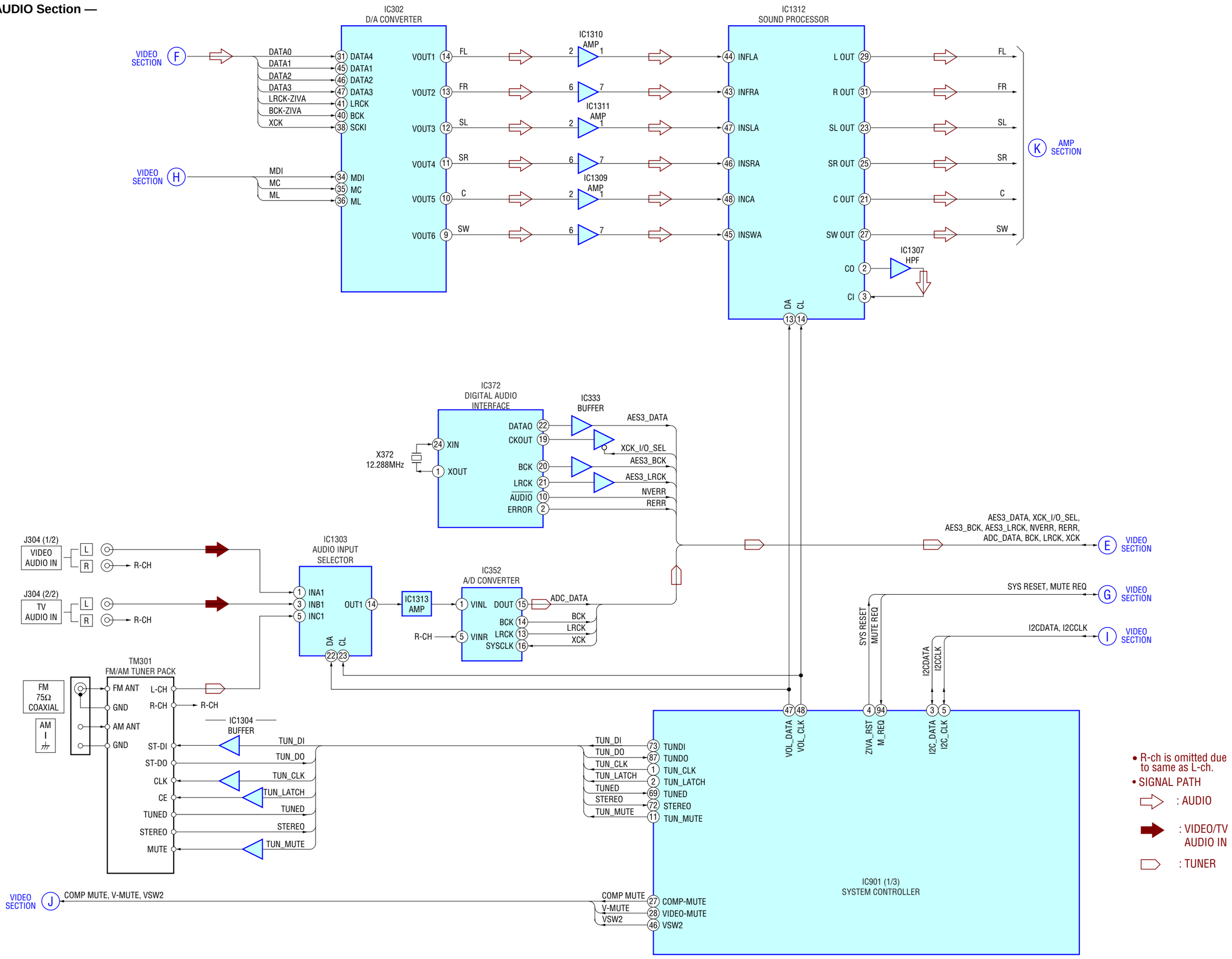

— AMP Section —

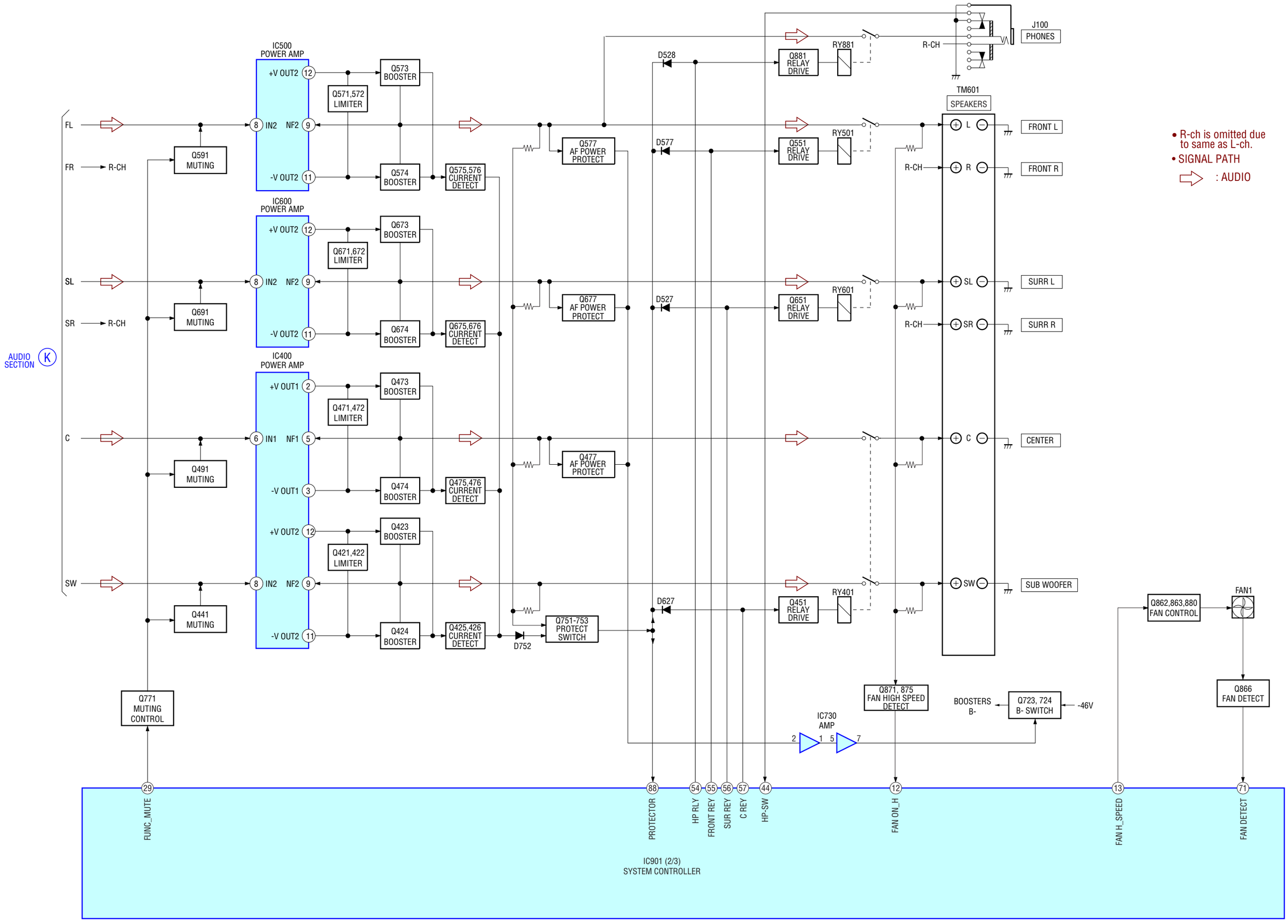

- R-ch is omitted due to same as L-ch.
- SIGNAL PATH
  ⇨ : AUDIO

— POWER Section —

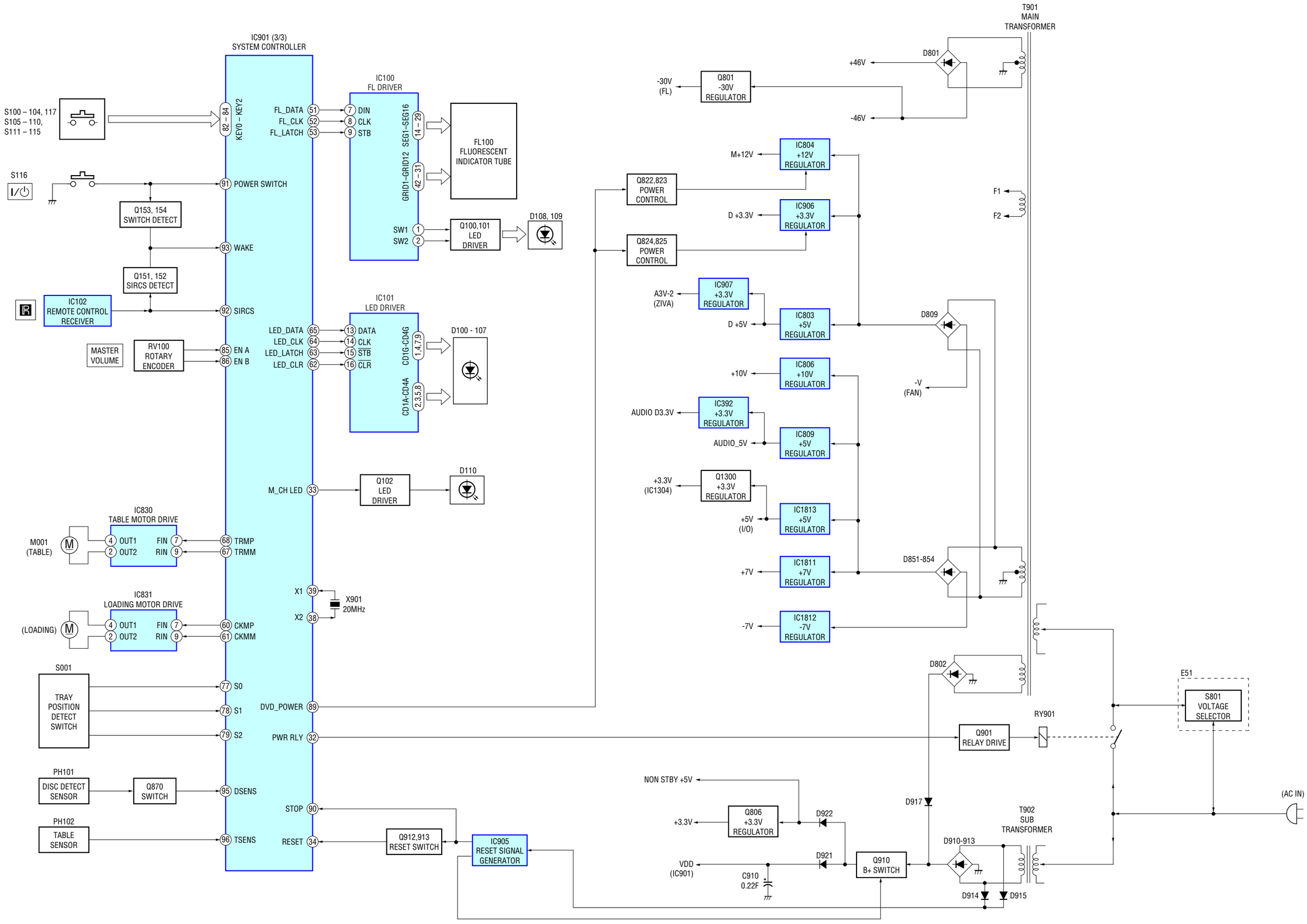

4-3. Printed Wiring Board — RF Section — • See page 25 for Circuit Boards Location.

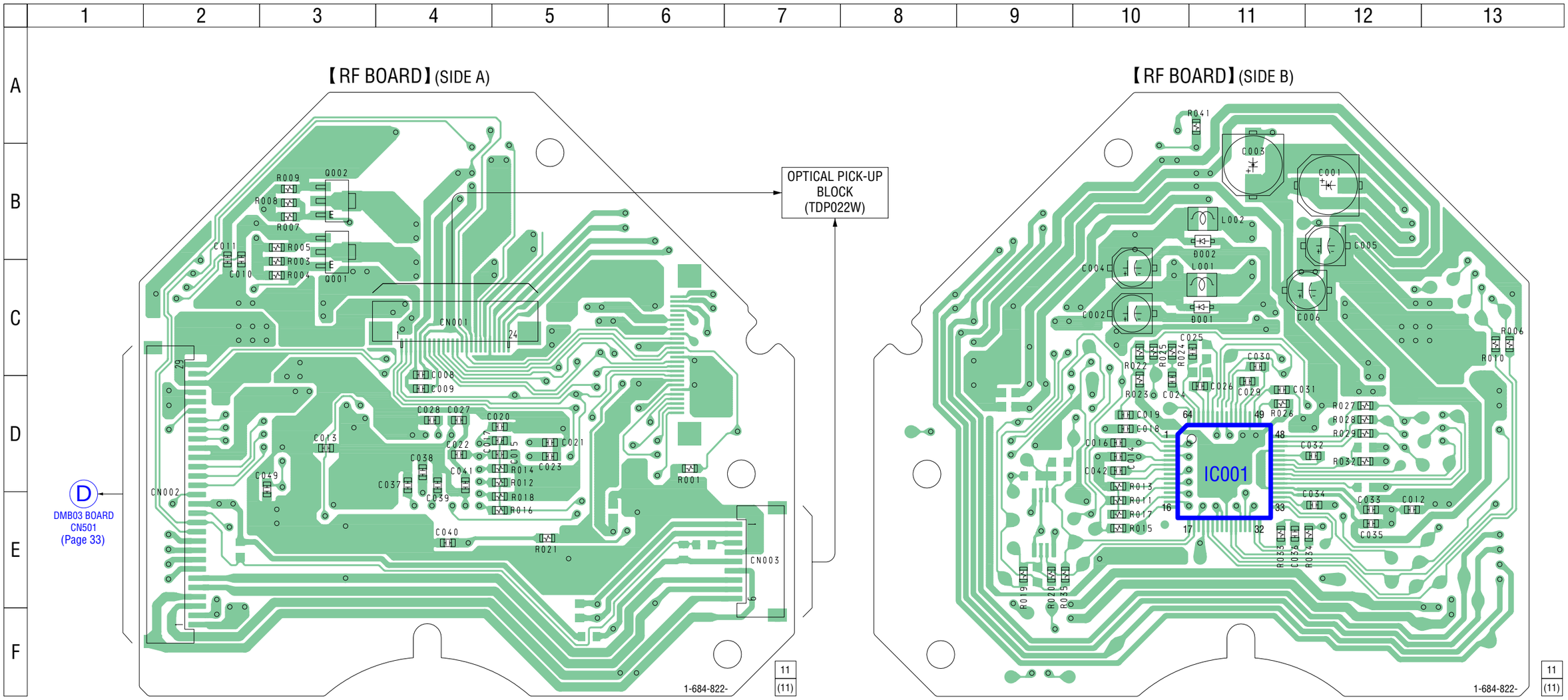

• **Semiconductor Location**

Ref. No.	Location
D001	D-11
D002	B-11
IC001	D-11
Q001	C-3
Q002	B-3

4-4. Schematic Diagram — RF Section —

• See page 53 for Wavefoms. • See page 54 for IC Block Diagrams.

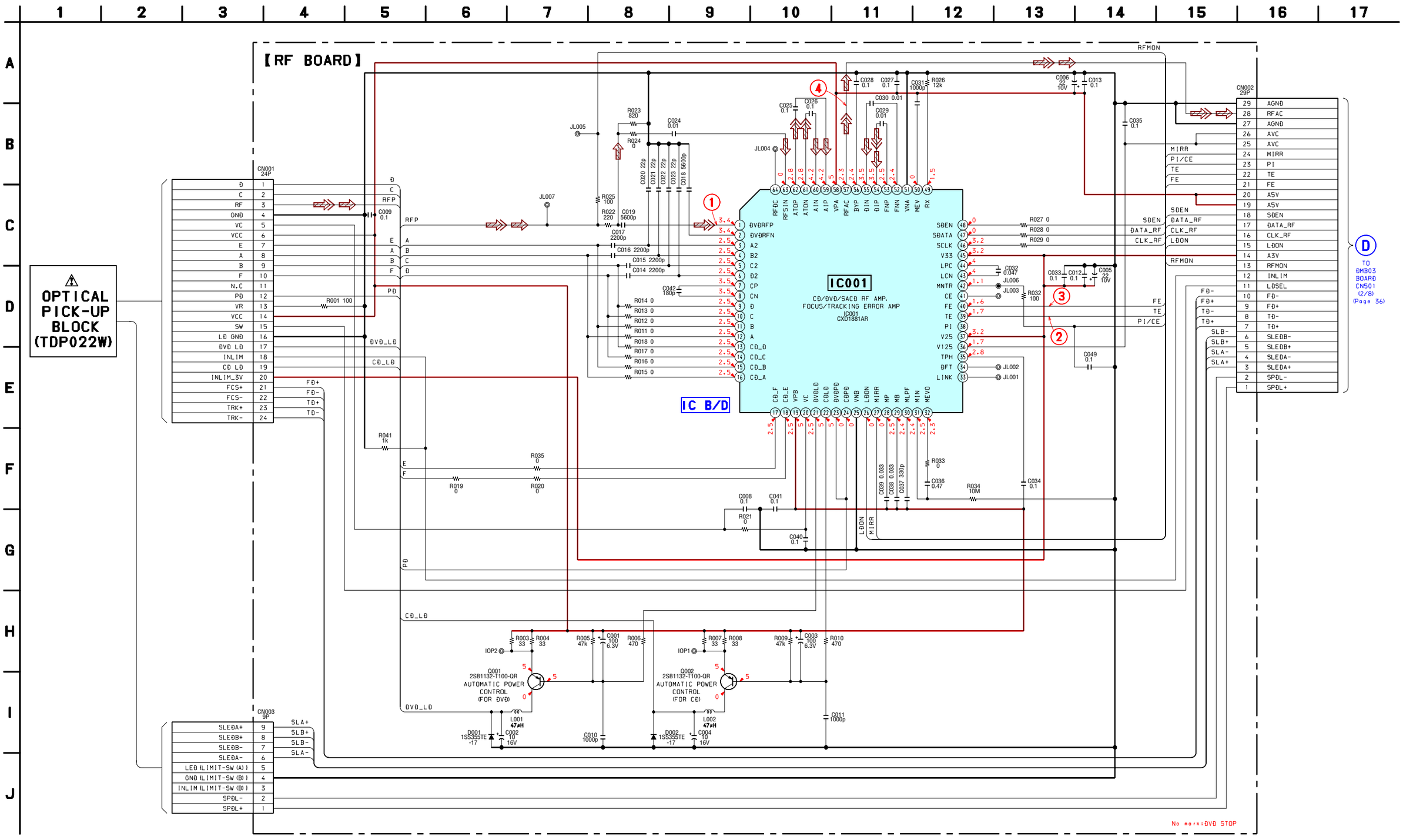

4-5. Printed Wiring Board — DMB Section (SIDE A) —

• See page 25 for Circuit Boards Location. • : Uses unleaded solder.

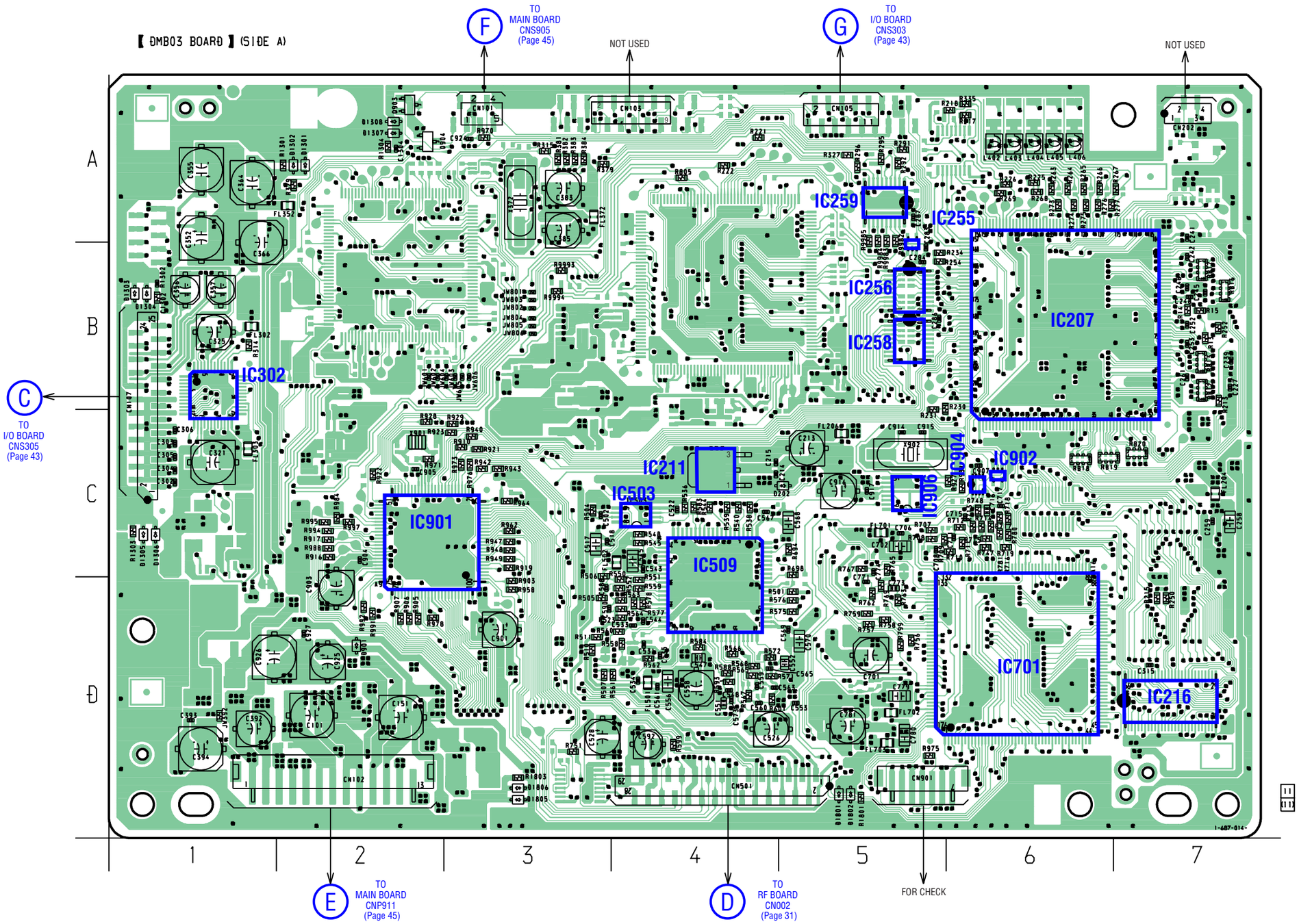

• **Semiconductor Location**

Ref. No.	Location
D202	C-5
D901	D-2
D1301	A-2
D1302	A-2
D1303	B-1
D1304	B-1
D1305	C-1
D1306	C-1
D1307	A-2
D1308	A-2
D1801	D-5
D1802	D-5
D1805	D-3
D1806	D-3
IC207	C-6
IC211	C-4
IC216	D-7
IC255	B-5
IC256	B-5
IC258	B-5
IC259	A-5
IC302	B-1
IC503	C-3
IC509	D-4
IC701	D-6
IC901	C-2
IC902	C-6
IC904	C-5
IC906	C-5
Q903	A-2
Q904	A-2

4-6. Printed Wiring Board — DMB Section (SIDE B) —

• See page 25 for Circuit Boards Location. • : Uses unleaded solder.

【 DMB03 BOARD 】(SIDE B)

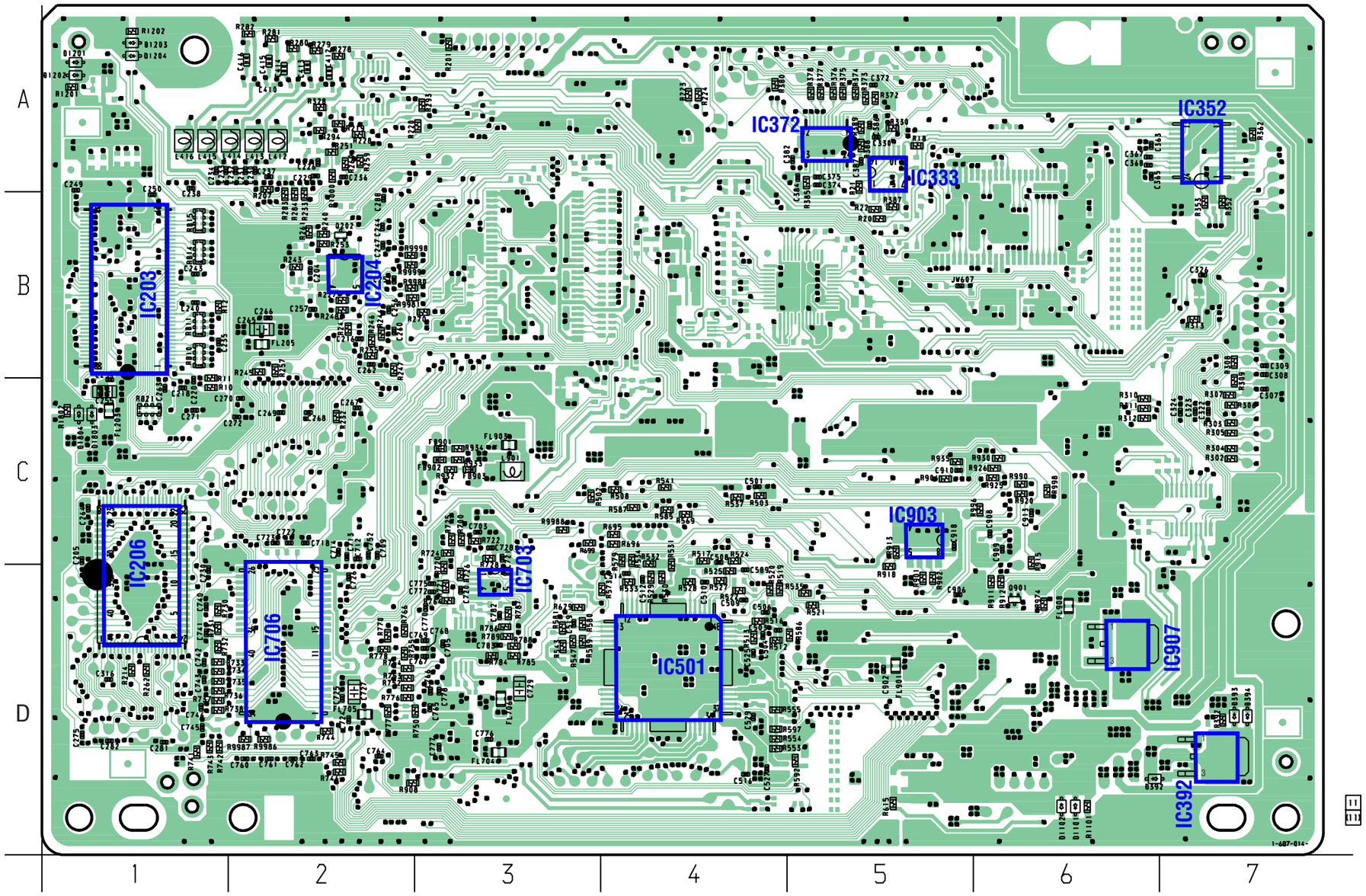

• **Semiconductor Location**

Ref. No.	Location
D392	D-6
D393	D-7
D394	D-7
D1101	D-6
D1102	D-6
D1201	A-1
D1202	A-1
D1203	A-1
D1204	A-1
D1803	C-1
D1804	C-1
IC203	B-1
IC204	B-2
IC206	D-1
IC333	B-5
IC352	A-7
IC372	A-5
IC392	D-7
IC501	D-4
IC703	D-3
IC706	D-2
IC903	C-5
IC907	D-6
Q202	B-2
Q901	D-6

4-7. Schematic Diagram — DMB Section (1/8) —

• See page 53 for Wavefoms. • See page 55, 56 for IC Block Diagrams.

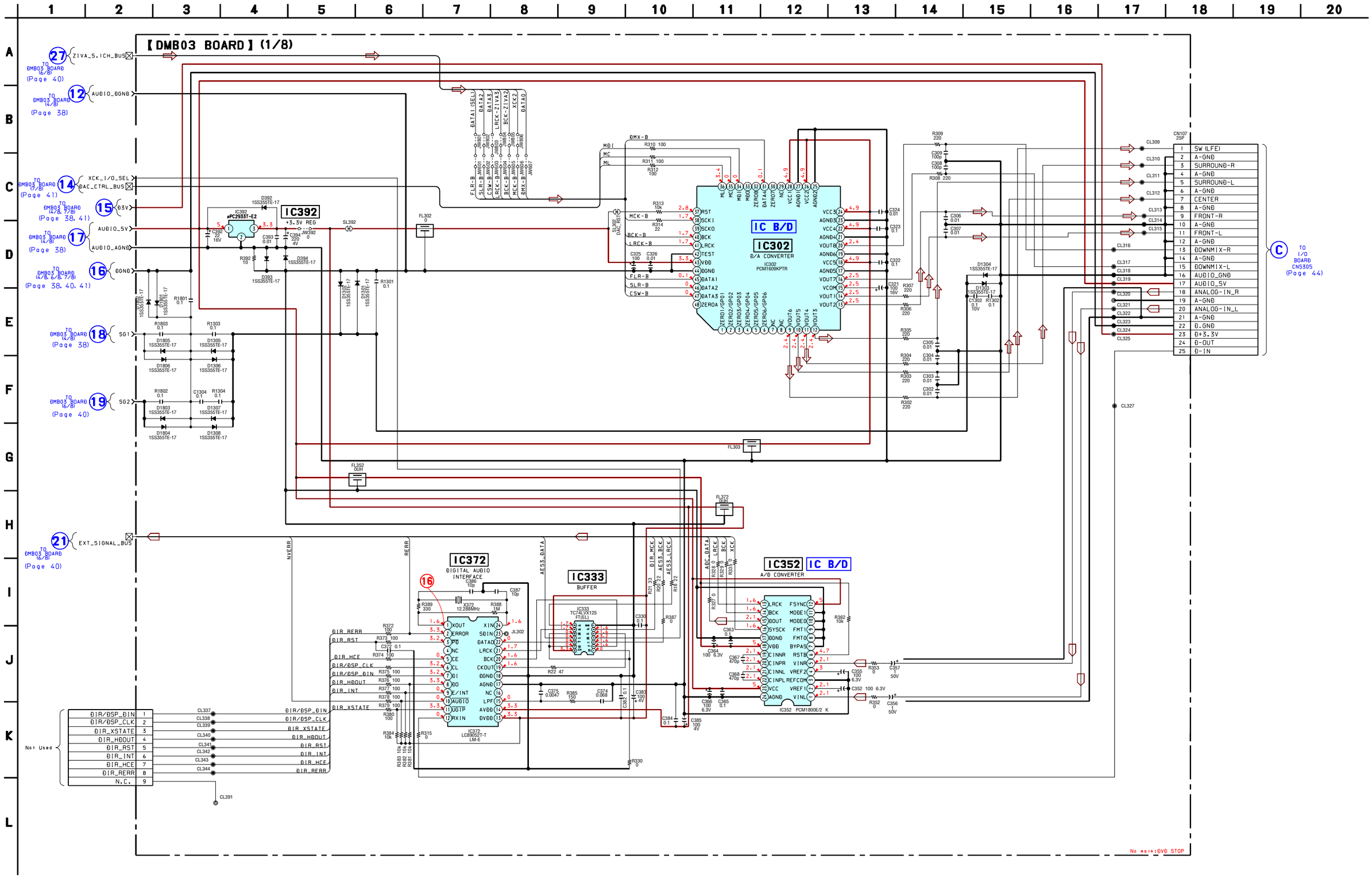

4-8. Schematic Diagram — DMB Section (2/8) —

• See page 56 for IC Block Diagrams.

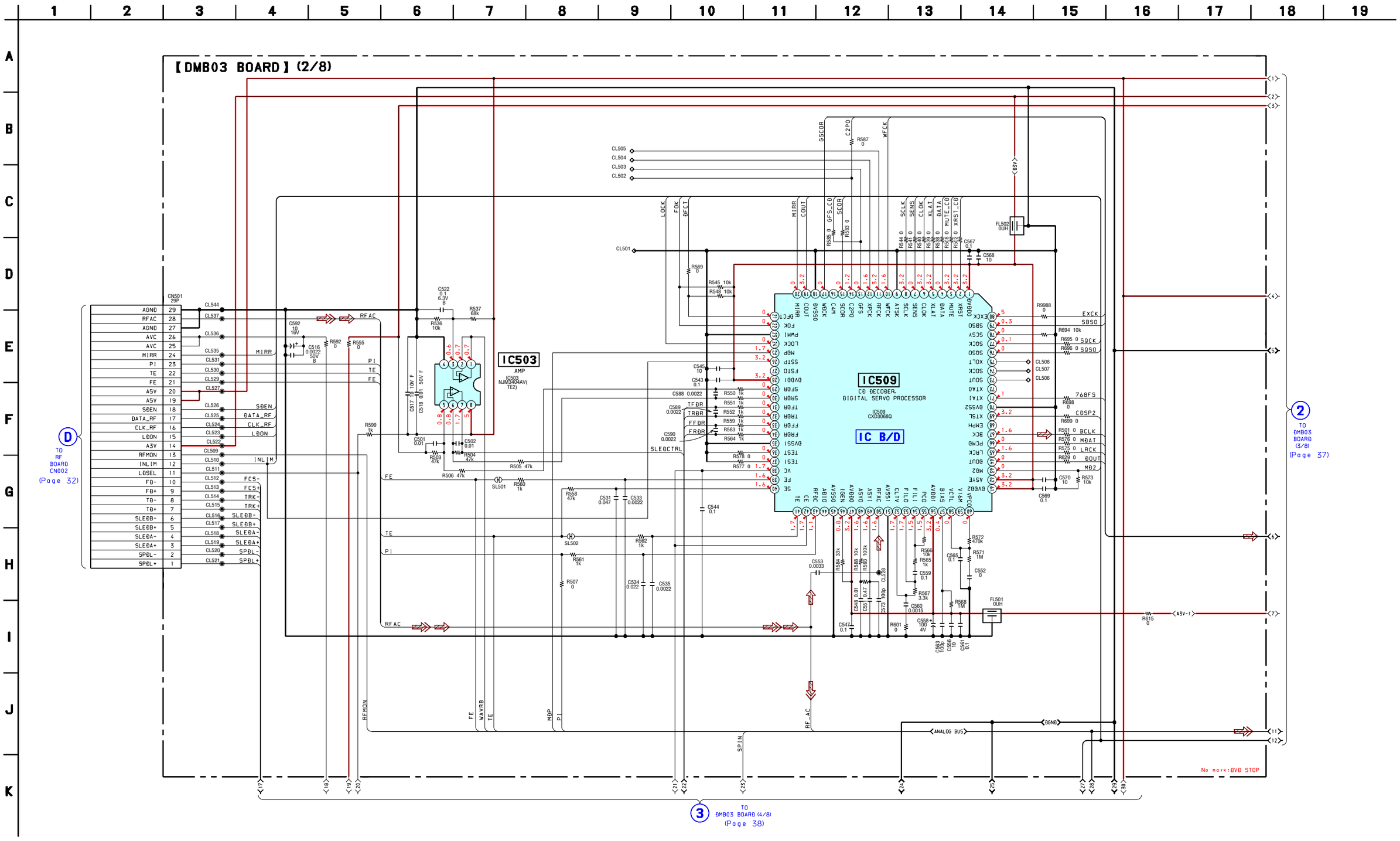

4-9. Schematic Diagram — DMB Section (3/8) —

• See page 57 for IC Block Diagrams.

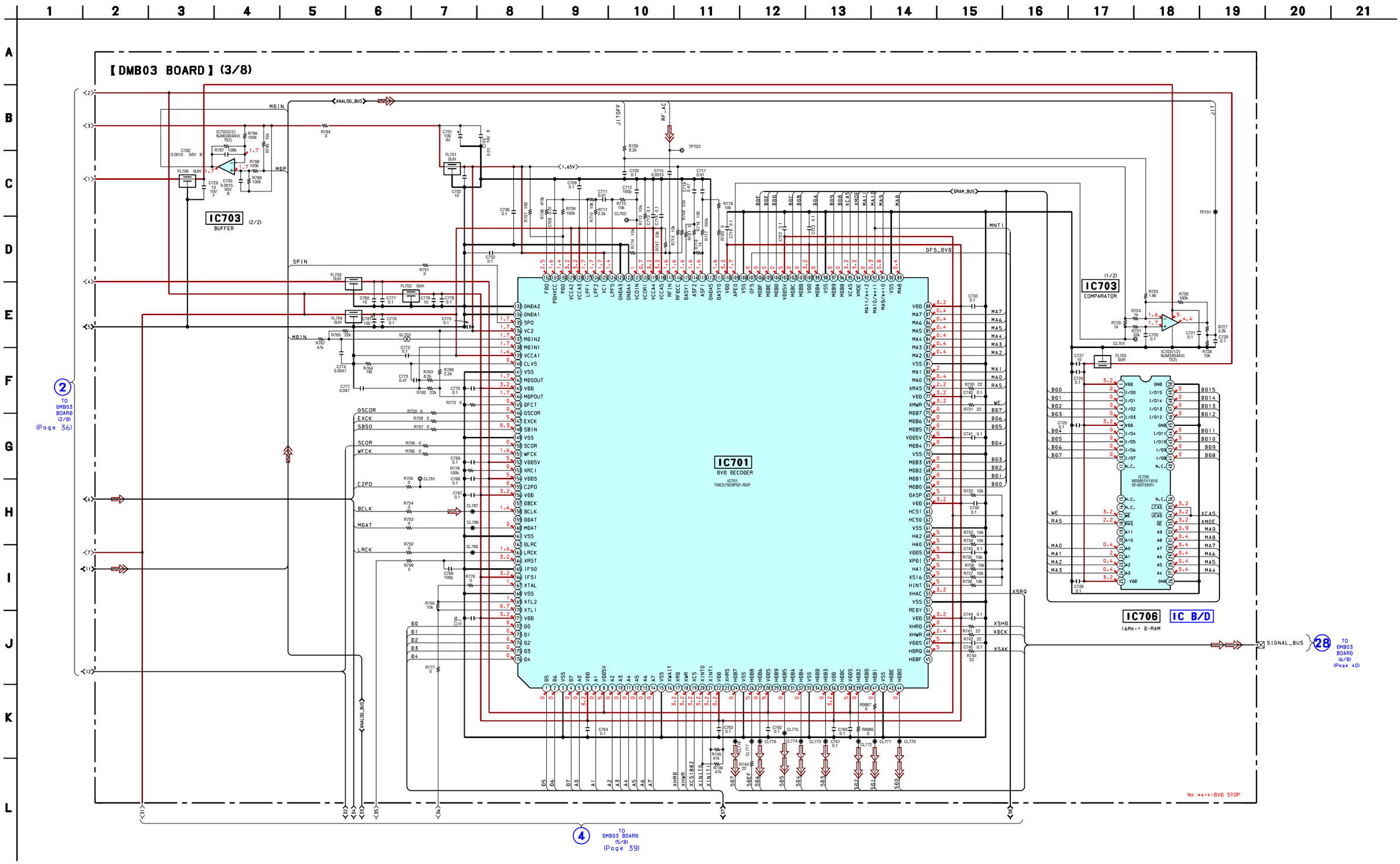

4-10. Schematic Diagram — DMB Section (4/8) —

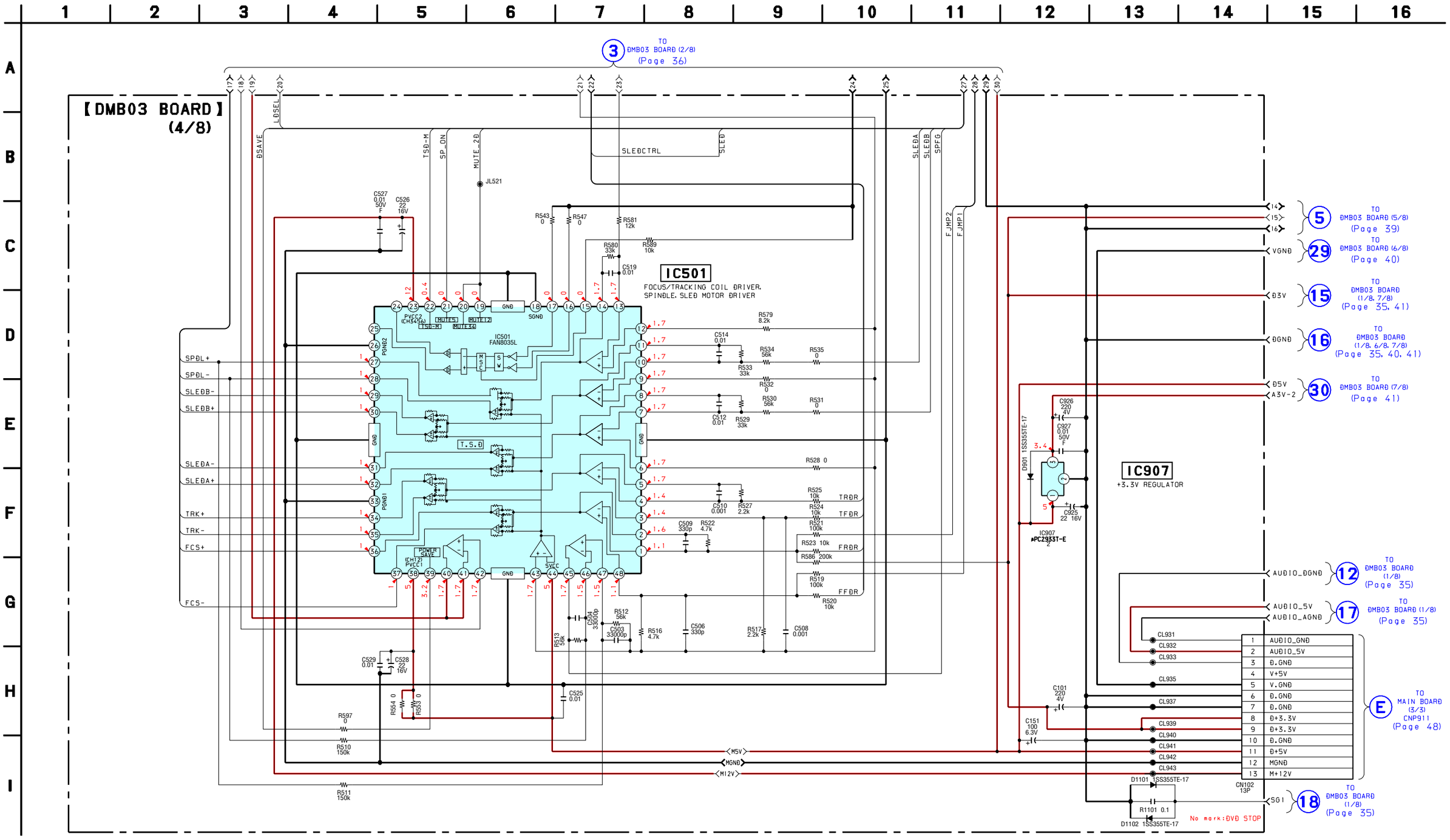

4-11. Schematic Diagram — DMB Section (5/8) —

• See page 53 for Wavefoms. • See page 57 for IC Block Diagrams.

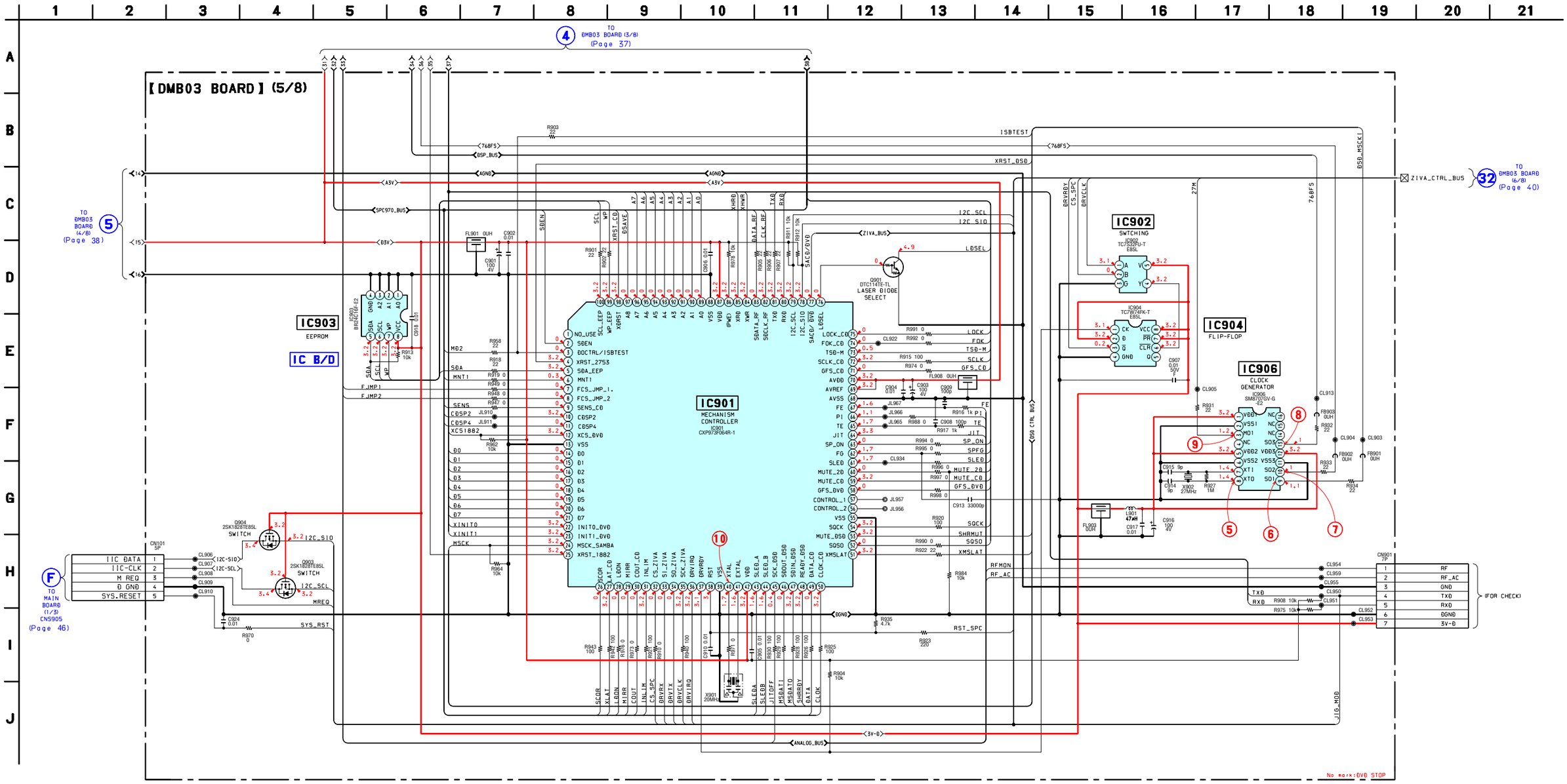

4-12. Schematic Diagram — DMB Section (6/8) —

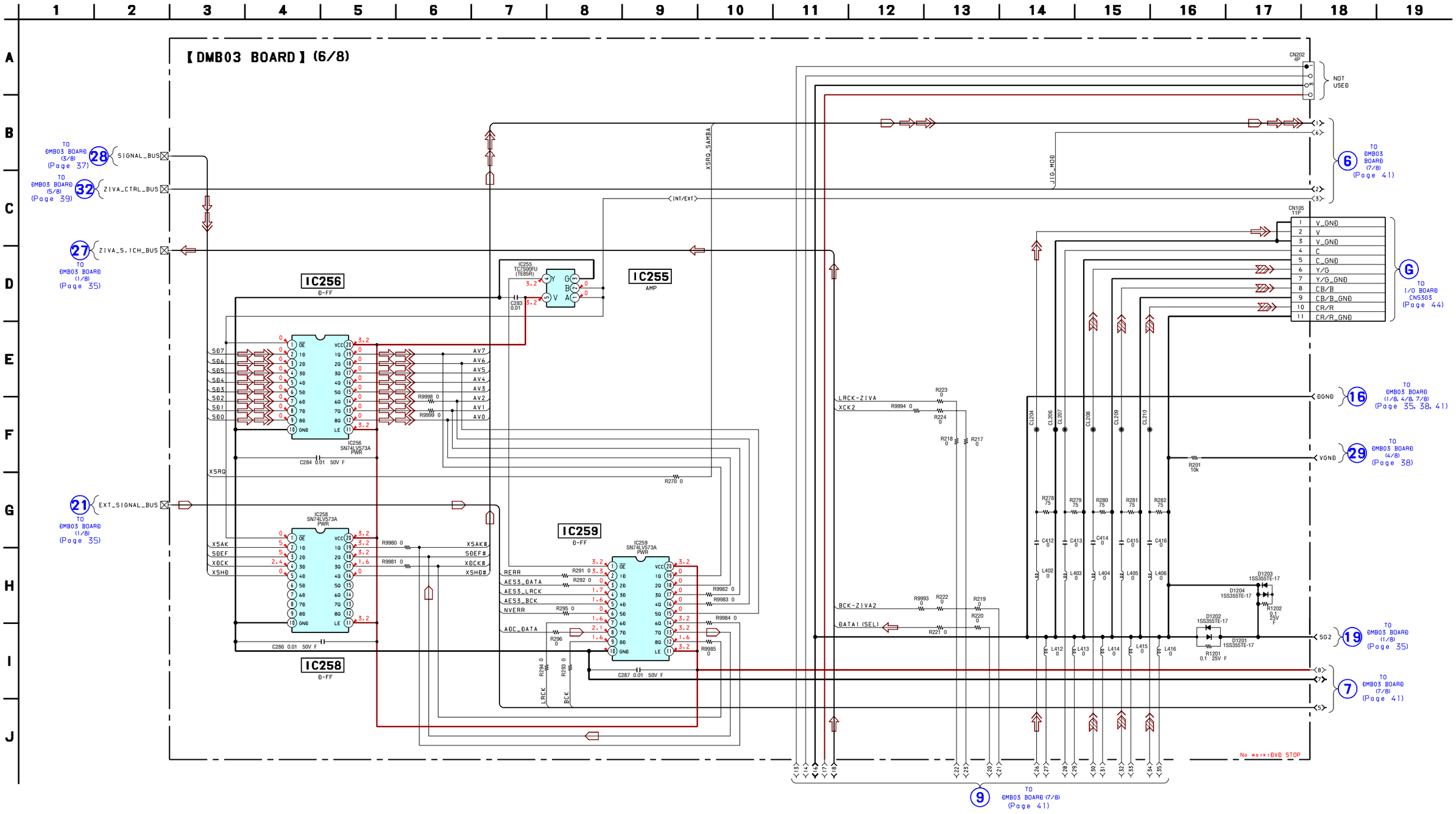

4-13. Schematic Diagram — DMB Section (7/8) —

• See page 53 for Wavefoms.

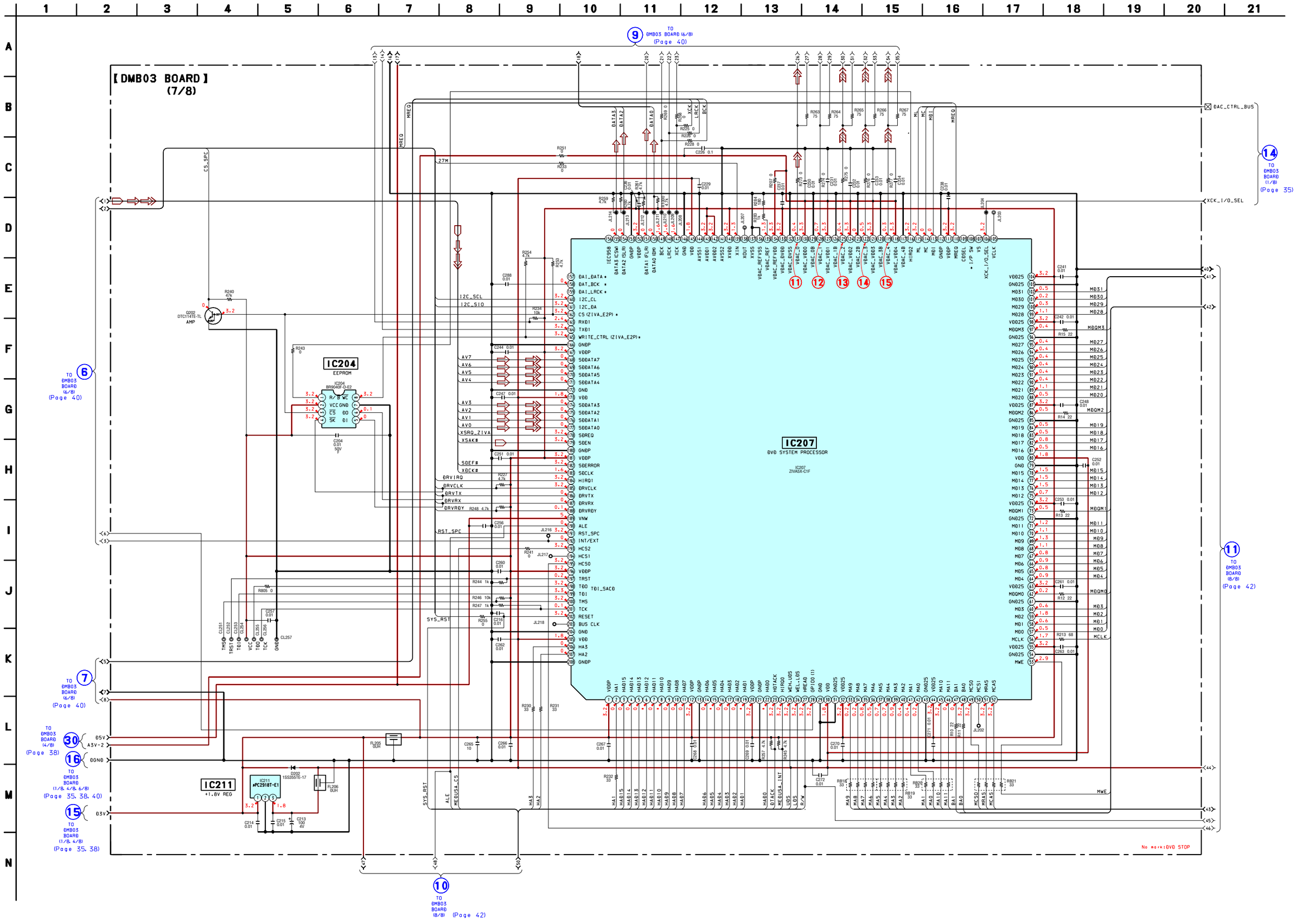

4-14. Schematic Diagram — DMB Section (8/8) —

• See page 55 for IC Block Diagrams.

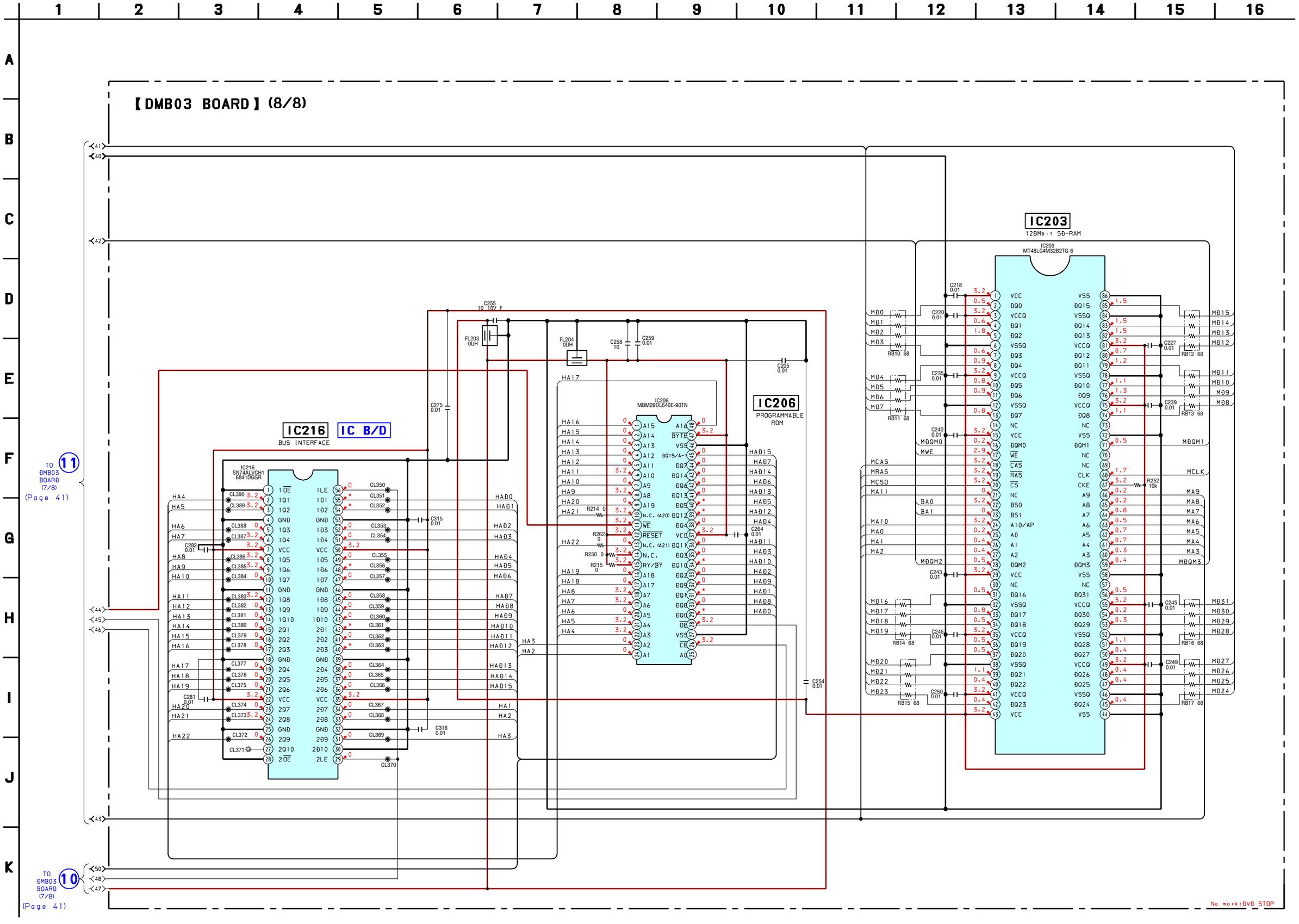

4-15. Printed Wiring Board — I/O Section —

• See page 25 for Circuit Boards Location. • : Uses unleaded solder.

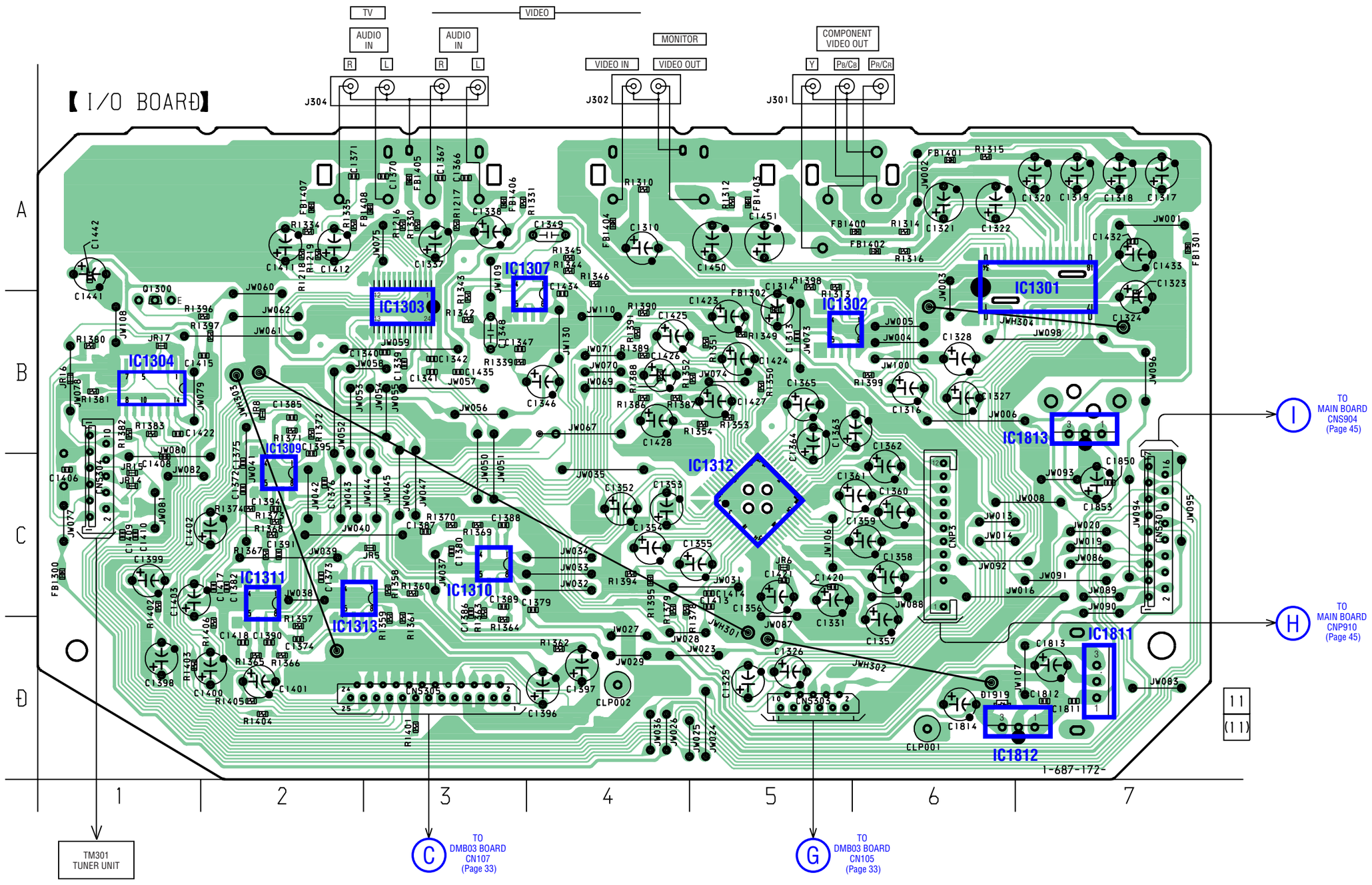

• Semiconductor Location

Ref. No.	Location
D1919	D-6
IC1301	B-7
IC1302	B-5
IC1303	B-3
IC1304	B-1
IC1307	B-3
IC1309	C-2
IC1310	C-3
IC1311	C-2
IC1312	C-5
IC1313	D-2
IC1811	D-7
IC1812	D-6
IC1813	C-7
Q1300	B-1

4-16. Schematic Diagram — I/O Section —

• See page 53 for Wavefoms. • See page 58 for IC Block Diagrams.

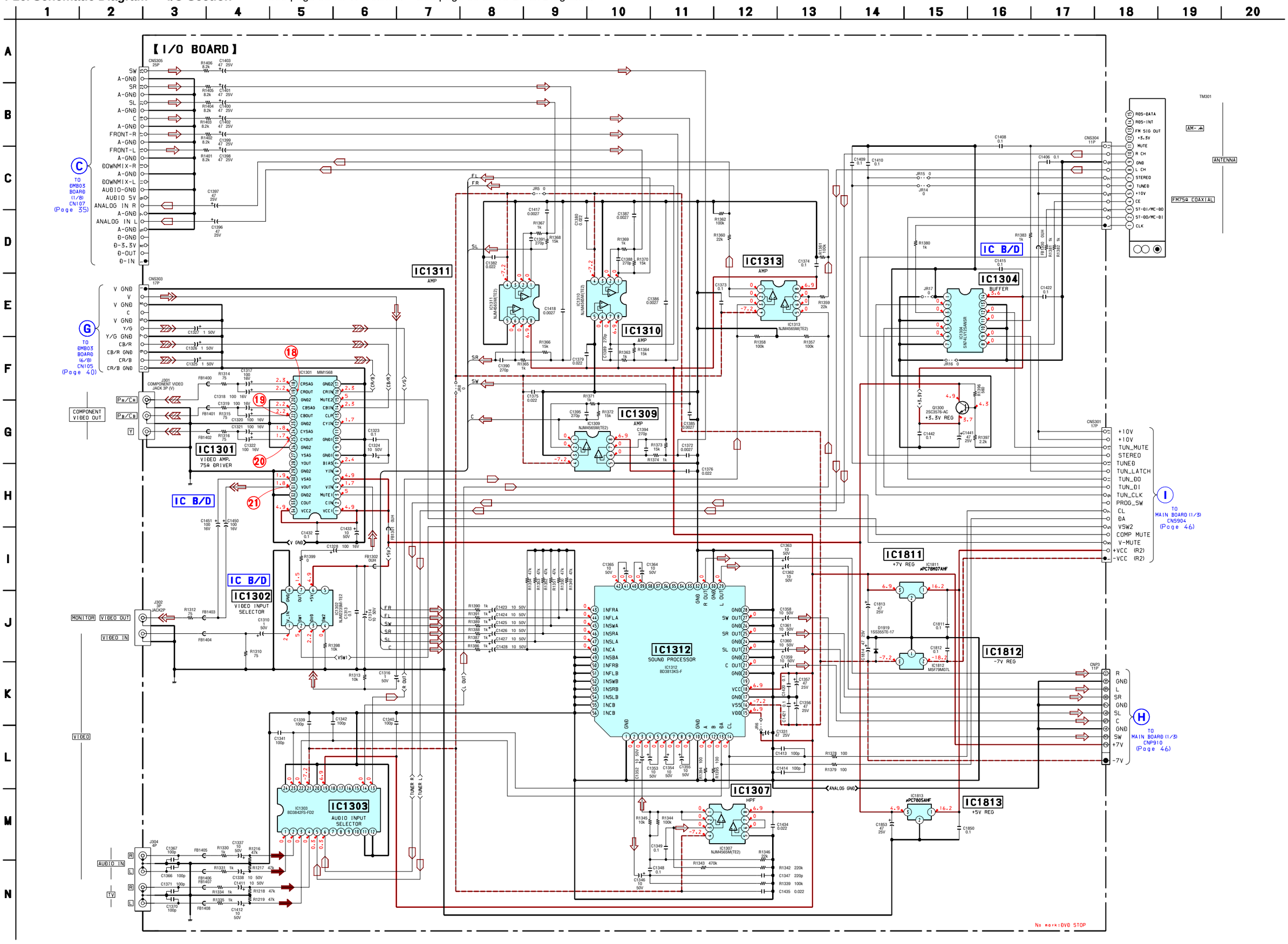

4-17. Printed Wiring Board — MAIN Section —

• See page 25 for Circuit Boards Location. • : Uses unleaded solder.

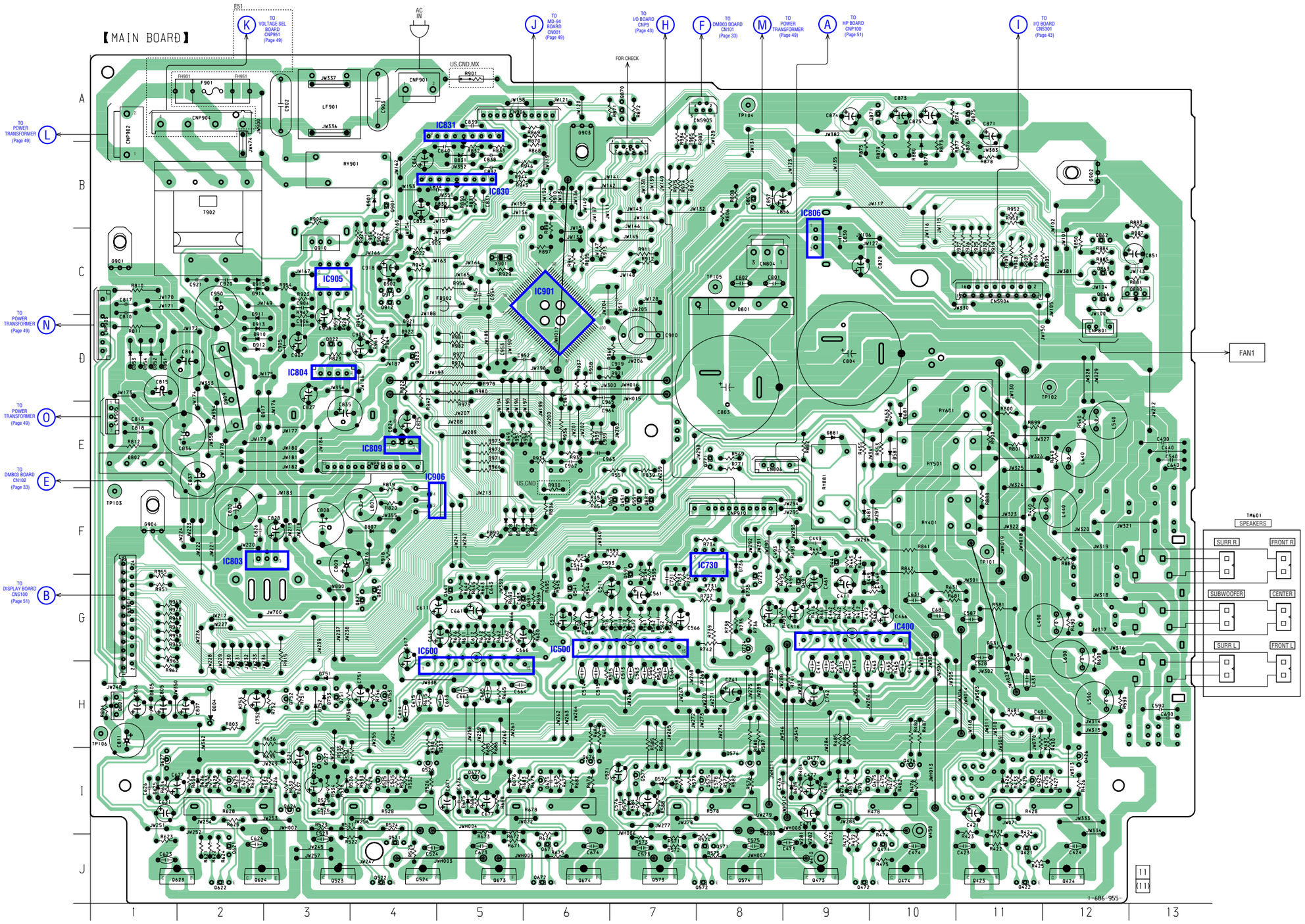

• **Semiconductor Location**

Ref. No.	Location	Ref. No.	Location
D426	I-11	Q426	I-12
D448	G-10	Q441	F-9
D449	G-10	Q451	F-7
D475	I-9	Q471	J-10
D476	I-9	Q472	J-9
D481	F-9	Q473	J-9
D525	I-3	Q474	J-10
D526	I-3	Q475	I-10
D527	F-5	Q476	I-10
D528	F-5	Q477	I-9
D575	I-7	Q491	G-9
D576	I-7	Q521	J-4
D577	F-5	Q522	J-4
D581	E-10	Q523	J-3
D625	I-11	Q524	J-4
D626	I-2	Q525	I-4
D627	F-5	Q526	I-4
D675	I-5	Q527	I-3
D676	I-5	Q541	G-6
D681	E-10	Q551	F-7
D735	G-8	Q571	J-8
D736	F-8	Q572	J-8
D751	H-3	Q573	J-7
D752	H-3	Q574	J-8
D753	H-3	Q575	I-8
D801	C-8	Q576	I-8
D802	E-1	Q577	I-7
D804	H-2	Q591	G-7
D805	H-1	Q621	J-2
D807	F-4	Q622	J-2
D809	E-2	Q623	J-1
D830	B-5	Q624	J-2
D831	B-5	Q625	I-2
D851	D-1	Q626	I-3
D852	D-1	Q627	I-1
D853	D-1	Q641	G-5
D854	D-1	Q651	F-6
D870	B-10	Q671	J-6
D881	E-9	Q672	J-6
D901	B-4	Q673	J-5
D902	C-4	Q674	J-6
D910	D-2	Q675	I-6
D911	D-2	Q676	I-6
D912	D-2	Q677	I-5
D913	D-2	Q691	G-6
D914	C-3	Q723	G-8
D915	C-3	Q724	G-8
D917	E-2	Q751	H-3
D921	D-4	Q752	H-3
D922	D-4	Q753	H-4
		Q771	E-8
IC400	G-10	Q801	H-1
IC500	G-6	Q806	B-8
IC600	H-5	Q822	D-3
IC730	F-7	Q823	D-4
IC803	F-3	Q824	G-4
IC804	D-3	Q825	G-4
IC806	C-9	Q862	C-12
IC809	E-4	Q863	C-12
IC830	B-5	Q866	C-12
IC831	A-5	Q870	A-6
IC901	C-6	Q871	B-10
IC905	C-3	Q875	B-11
IC906	E-4	Q880	C-13
		Q881	F-7
Q421	J-11	Q901	B-4
Q422	J-11	Q910	C-3
Q423	J-11	Q912	D-4
Q424	J-12	Q913	C-4
Q425	I-11		

4-18. Schematic Diagram — MAIN Section (1/3) —

• See page 53 for Wavefoms. • See page 59 for IC Block Diagrams.

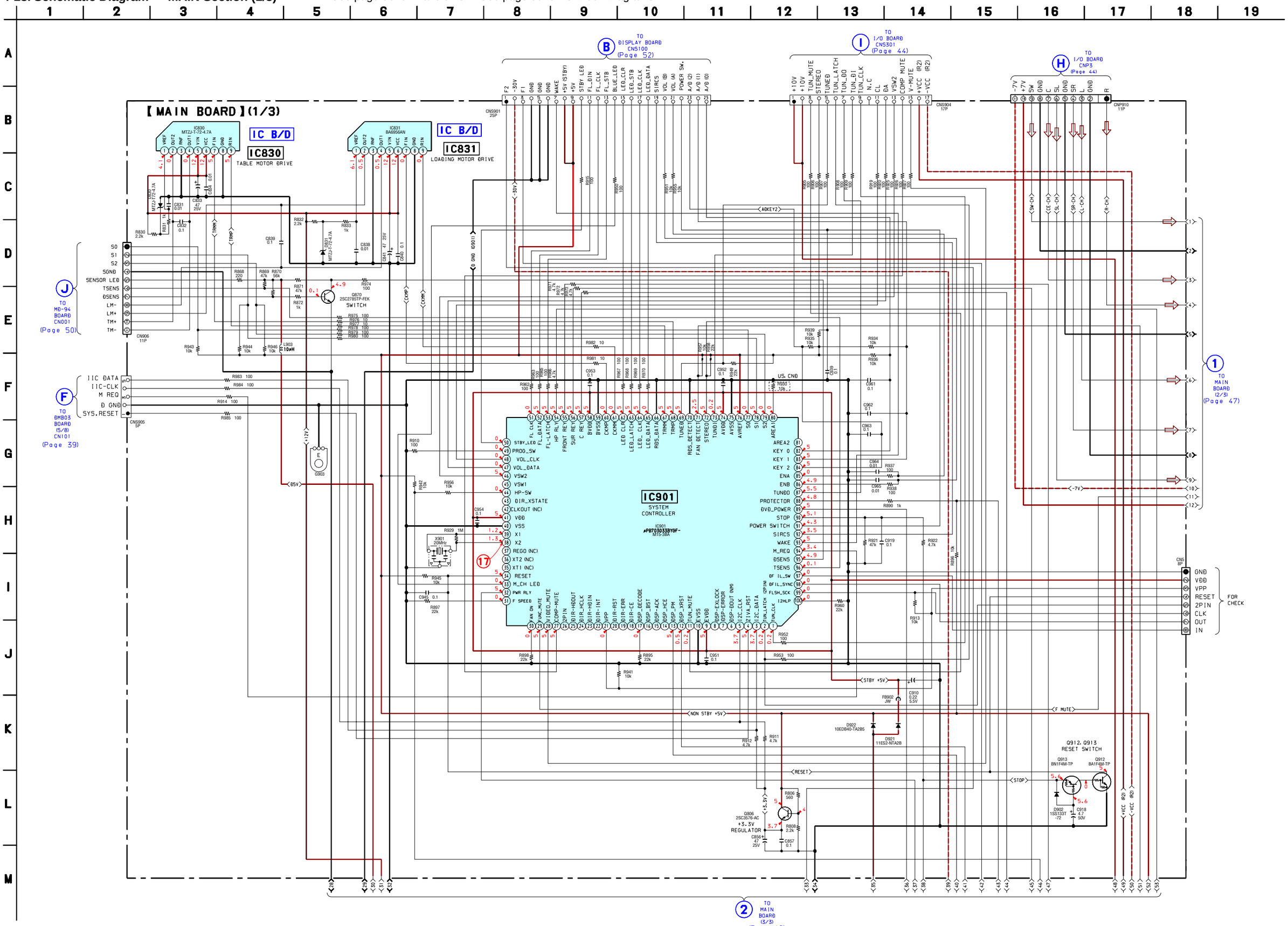

4-19. Schematic Diagram — MAIN Section (2/3) —

• See page 59 for IC Block Diagrams.

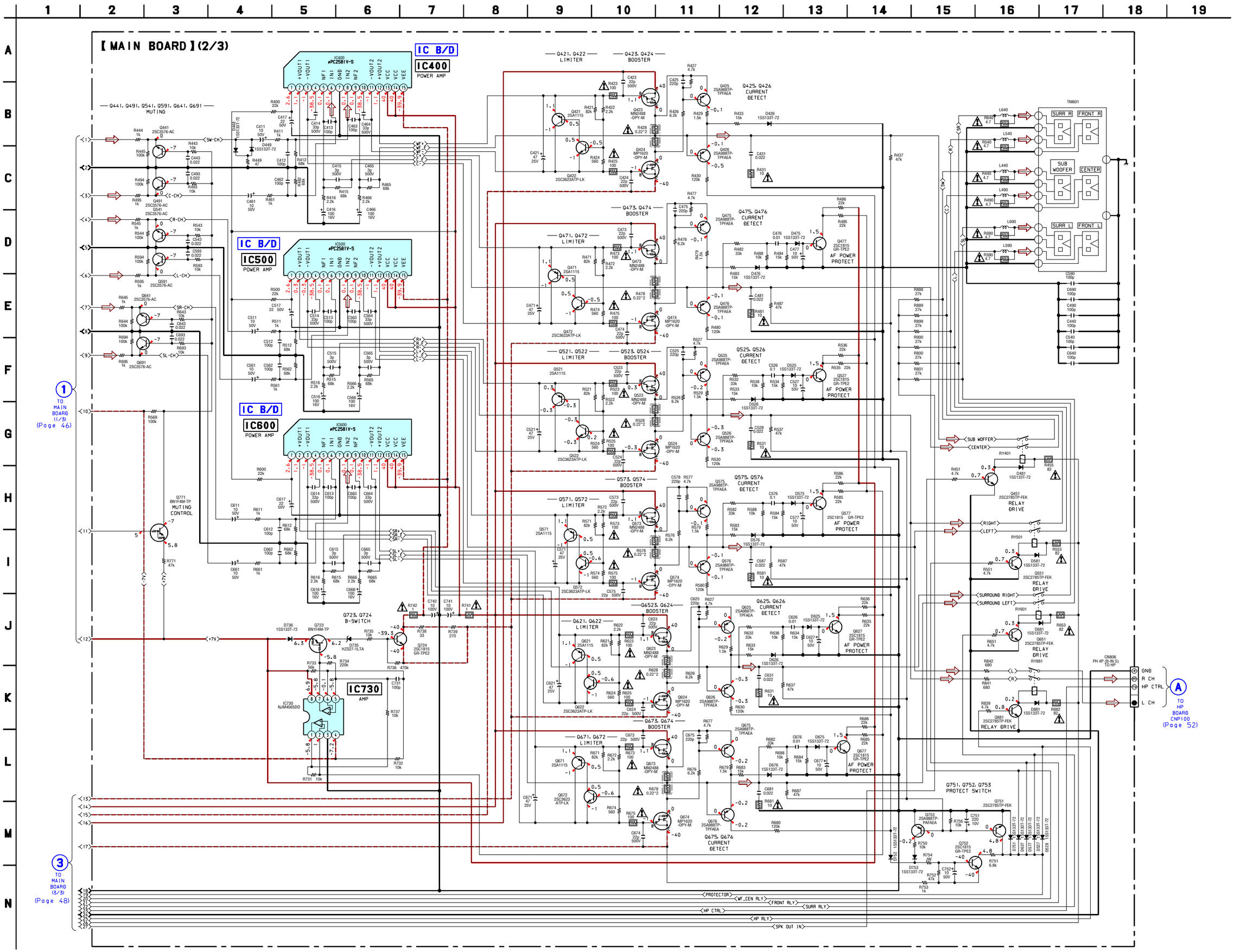

4-20. Schematic Diagram — MAIN Section (3/3) —

• See page 59 for IC Block Diagrams.

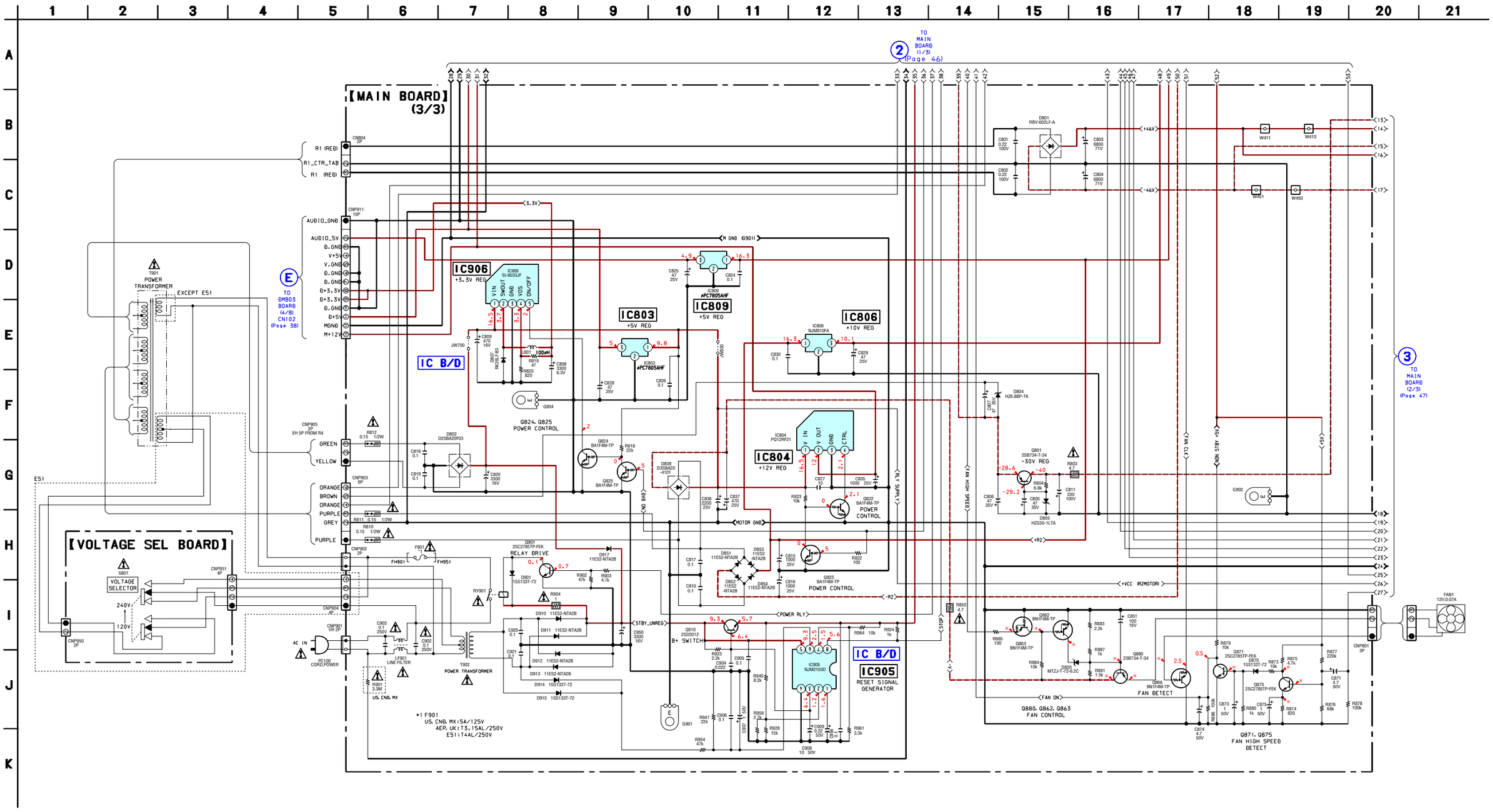

4-21. Printed Wiring Board — VOLTAGE SELECTOR, LOADING Section — • See page 25 for Circuit Boards Location. • : Uses unleaded solder.

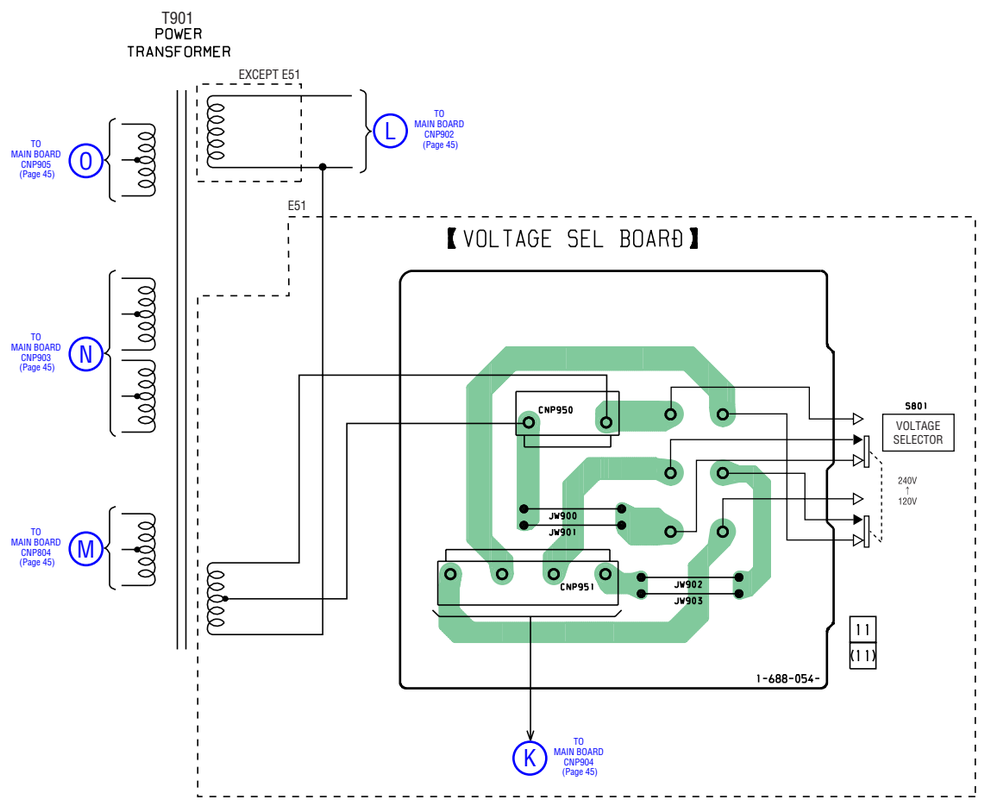

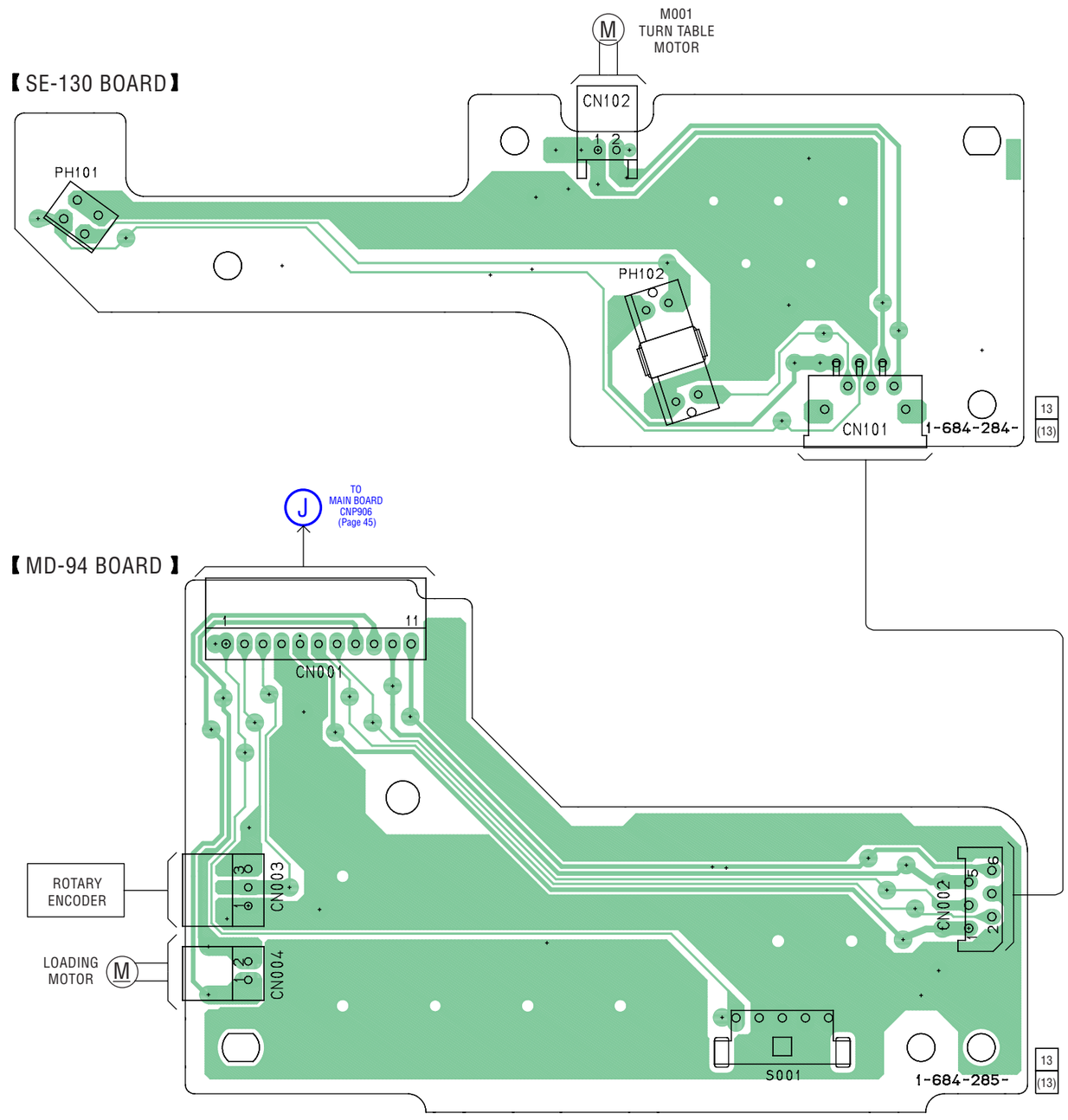

4-22. Schematic Diagram — LOADING Section —

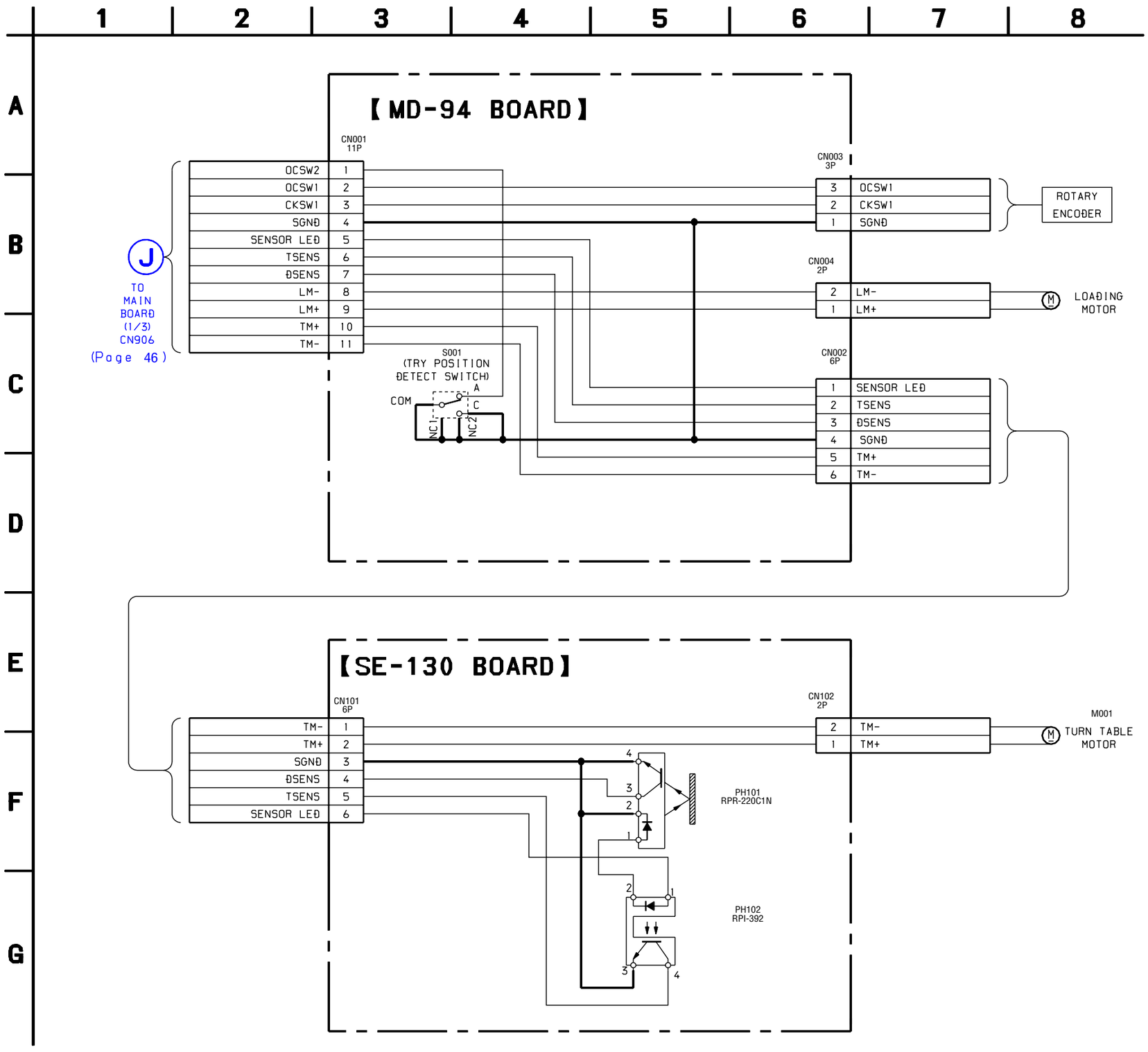

4-23. Printed Wiring Board — DISPLAY Section — • See page 25 for Circuit Boards Location. • **:** Uses unleaded solder.

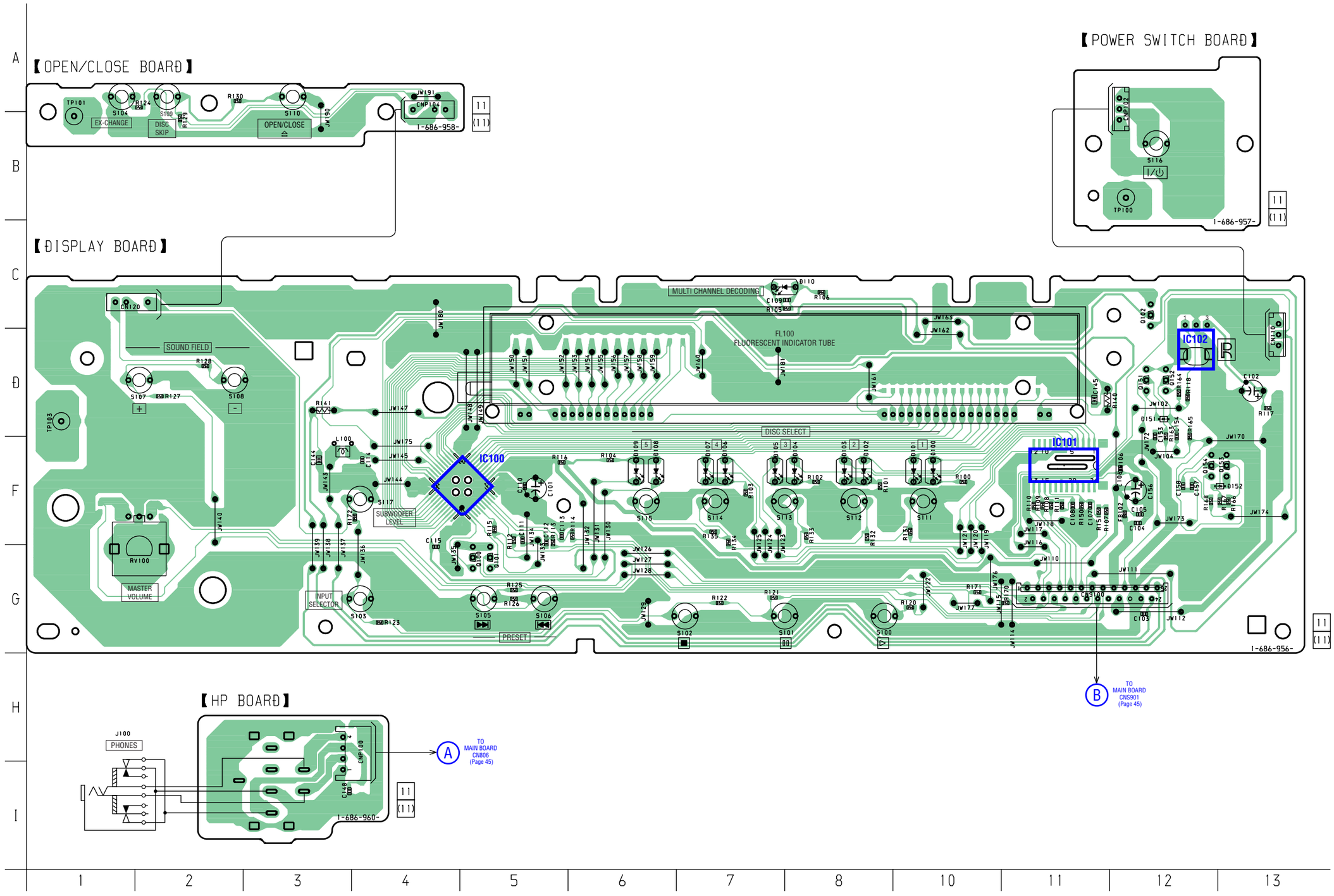

• **Semiconductor Location**

Ref. No.	Location
D100	E-10
D101	E-10
D102	E-8
D103	E-8
D104	E-8
D105	E-7
D106	E-7
D107	E-7
D108	E-6
D109	E-6
D110	C-8
D151	D-11
D152	E-12
IC100	E-5
IC101	E-10
IC102	D-11
Q100	F-5
Q101	F-5
Q102	C-11
Q151	D-11
Q152	D-11
Q153	E-12
Q154	E-11

4-24. Schematic Diagram — DISPLAY Section —

• See page 60 for IC Block Diagrams.

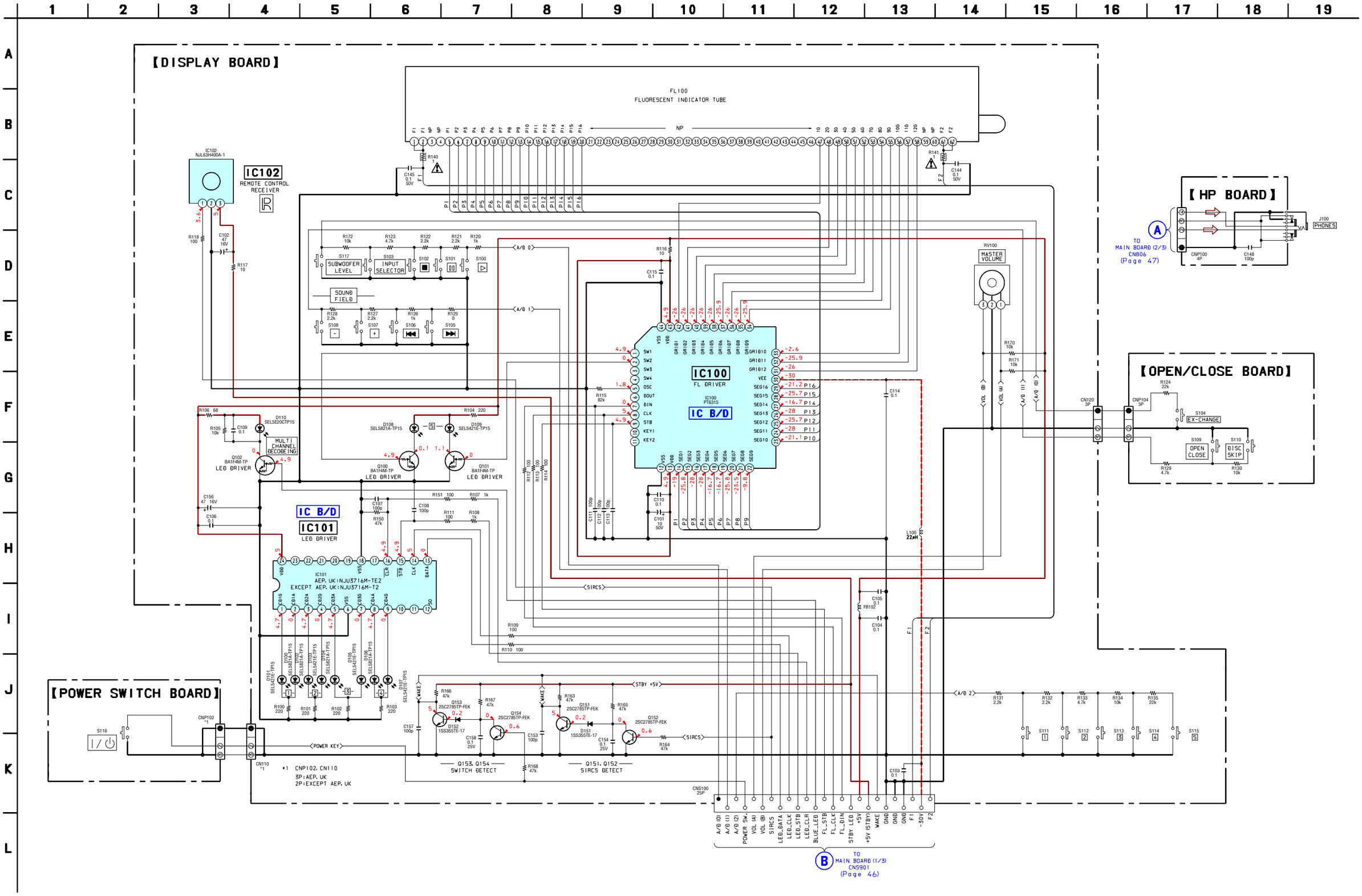

• Waveforms

-RF Board-

① IC001 ① (DVDRFP) 800 mVp-p 200 mV/DIV, 100 ns/DIV	② IC001 ㊴ (TE) 0.5 Vp-p 500 mV/DIV, 1 ms/DIV	③ IC001 ㊵ (FE) 0.3 Vp-p 100 mV/DIV, 1 ms/DIV	④ IC001 ㊼ (RFAC) 1.3 Vp-p 500 mV/DIV, 100 ns/DIV

-DMB03 Board-

⑤ IC906 ⑧ (XTO) 4.5 Vp-p 37 ns 1 V/DIV, 10 ns/DIV	⑥ IC906 ⑨ (SO1) 4.2 Vp-p 29.5 ns 1 V/DIV, 10 ns/DIV	⑦ IC906 ⑩ (SO2) 4.5 Vp-p 29.5 ns 1 V/DIV, 10 ns/DIV	⑧ IC906 ⑬ (SO3) 4.6 Vp-p 29.5 ns 1 V/DIV, 10 ns/DIV
⑨ IC906 ③ (MO1) 5.6 Vp-p 37 ns 1 V/DIV, 10 ns/DIV	⑩ IC901 ㊵ (XTAL) 3.9 Vp-p 50 ns 1 V/DIV, 20 ns/DIV	⑪ IC207 ⑬⑪ (VDAC 0) 1.3 Vp-p H 500 mV/DIV, 20 µs/DIV	⑫ IC207 ⑫⑧ (VDAC 1) H 900 mVp-p 200 mV/DIV, 20 µs/DIV
⑬ IC207 ⑫⑤ (VDAC 2) 1.2 Vp-p H 200 mV/DIV, 20 µs/DIV	⑭ IC207 ⑫② (VDAC 3) 820 mVp-p H 200 mV/DIV, 20 µs/DIV	⑮ IC207 ⑪⑨ (VDAC 4) H 820 mVp-p 200 mV/DIV, 20 µs/DIV	⑯ IC372 ① (XOUT) 3.3 Vp-p 82 ns 1 V/DIV, 40 ns/DIV

-MAIN Board-

⑰ IC901 ㊳ (X2) 3.2 Vp-p 50 ns 1 V/DIV, 20 ns/DIV

-I/O Board-

⑱ IC1301 ⑲(CROUT) H 1.4 Vp-p 500 mV/DIV, 20 µs/DIV	⑲ IC1301 ㉒(CBOUT) 1.4 Vp-p H 500 mV/DIV, 20 µs/DIV	⑳ IC1301 ㉕ (CYOUT) 2.1 Vp-p H 500 mV/DIV, 20 µs/DIV	㉑ IC1301 ㉛ (V OUT) 2.5 Vp-p H 500 mV/DIV, 20 µs/DIV

4-25. IC Block Diagrams

IC001 CXD1881AR (RF BOARD)

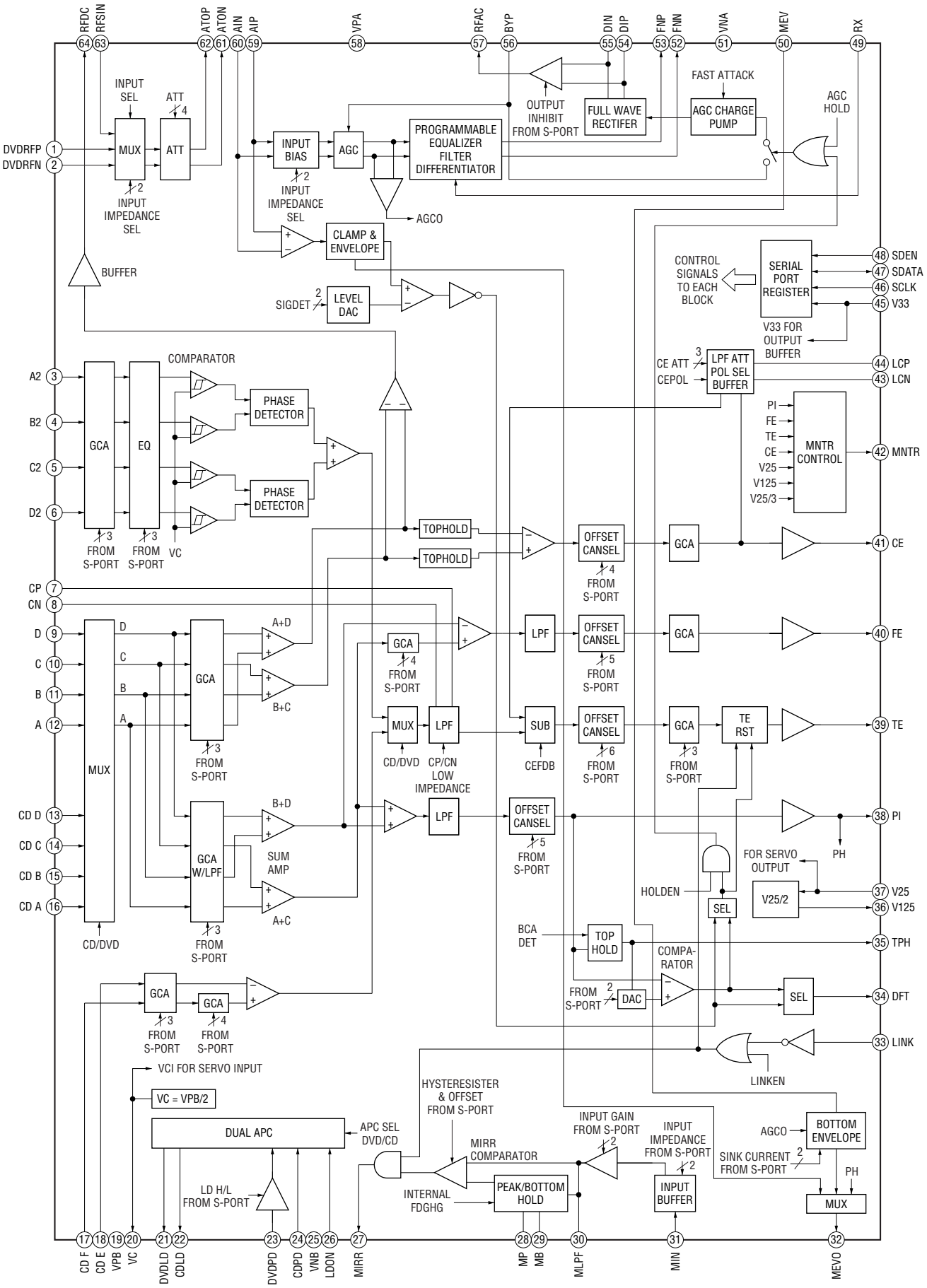

IC216 SN74ALVCH16841DGGR (DMB03 BOARD)

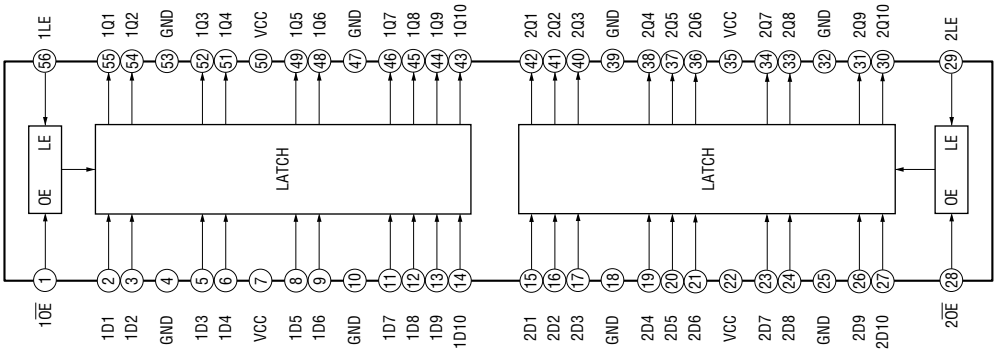

IC302 PCM1609KPTR (DMB03 BOARD)

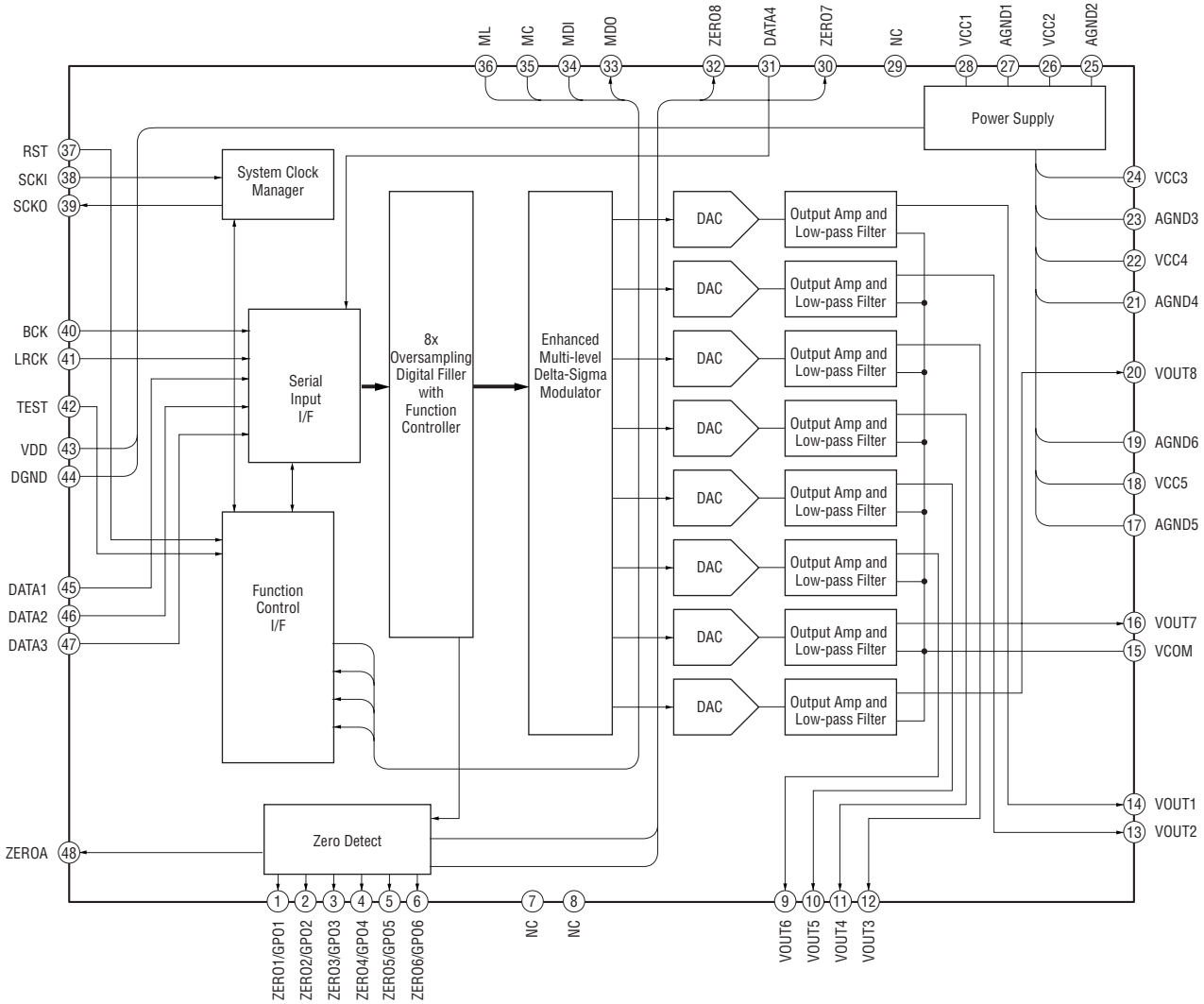

IC352 PCM1800E/2K (DMB03 BOARD)

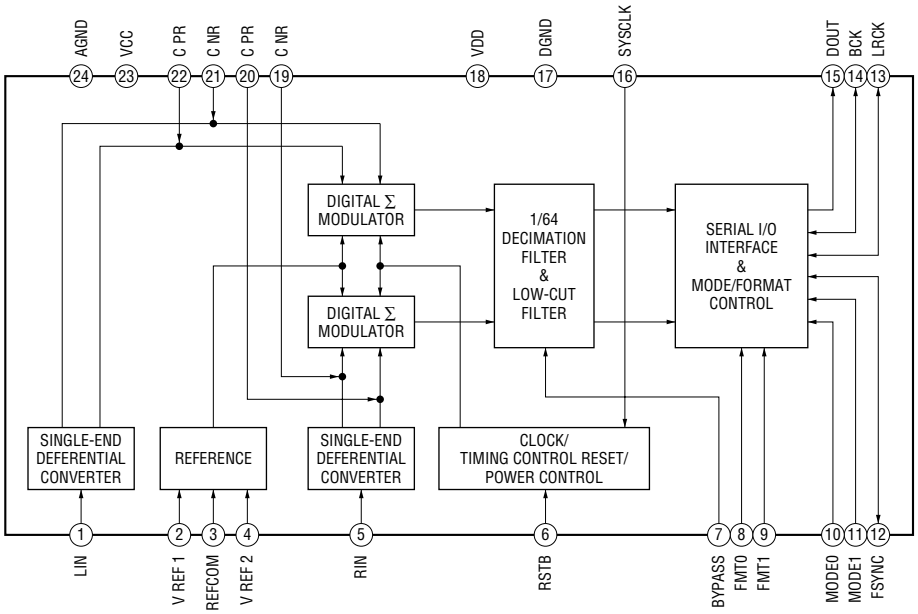

IC509 CXD3068Q (DMB03 BOARD)

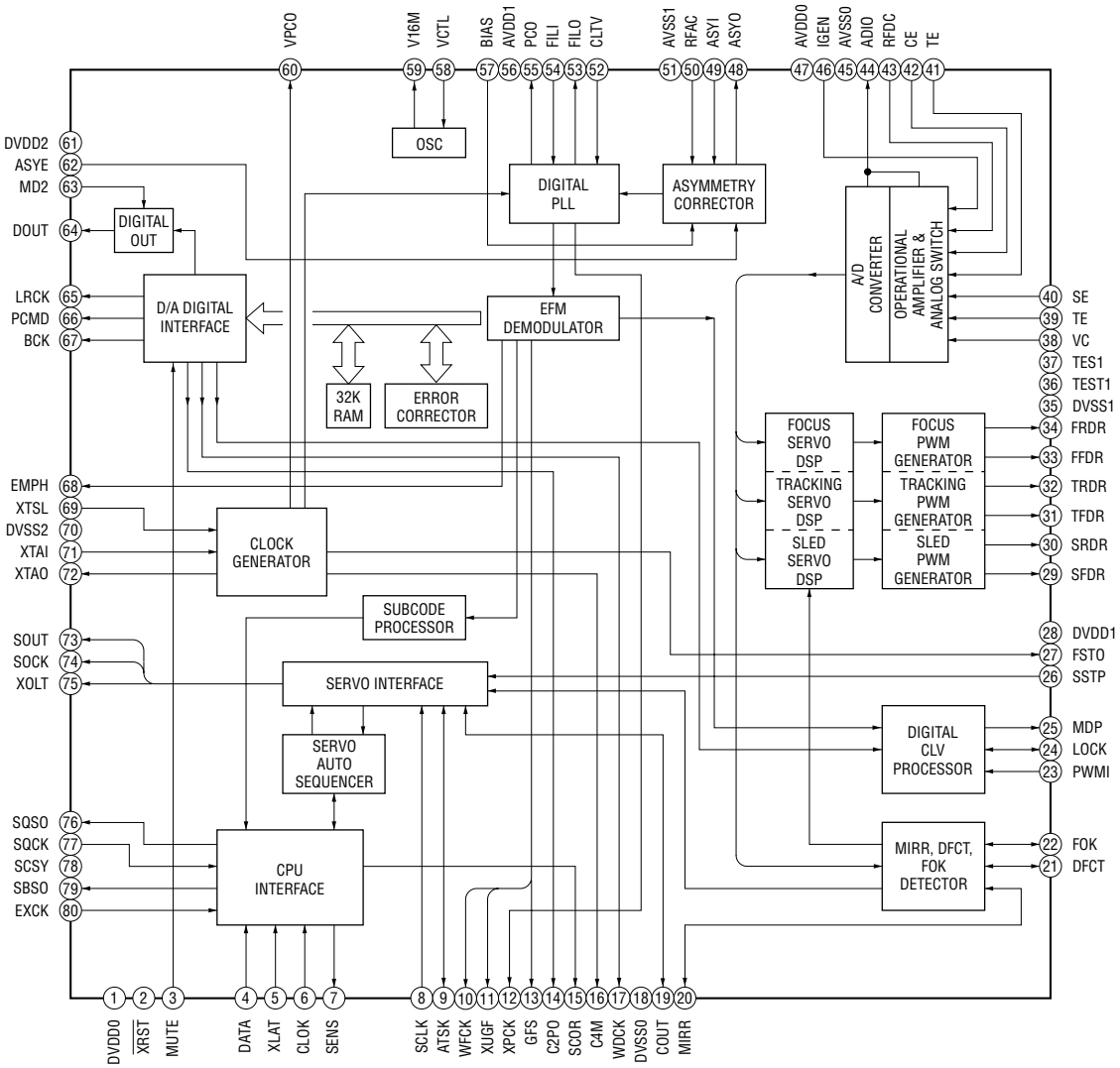

IC706 MSM51V18165F-60TSKR1 (DMB03 BOARD)

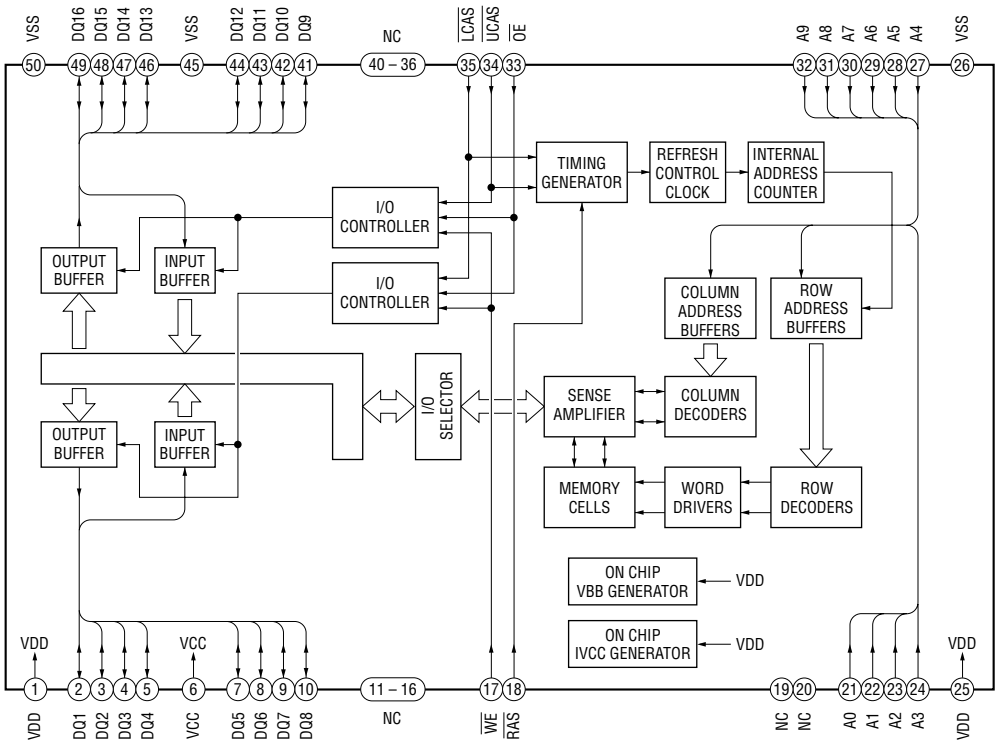

IC903 BR24C16F-E2 (DMB03 BOARD)

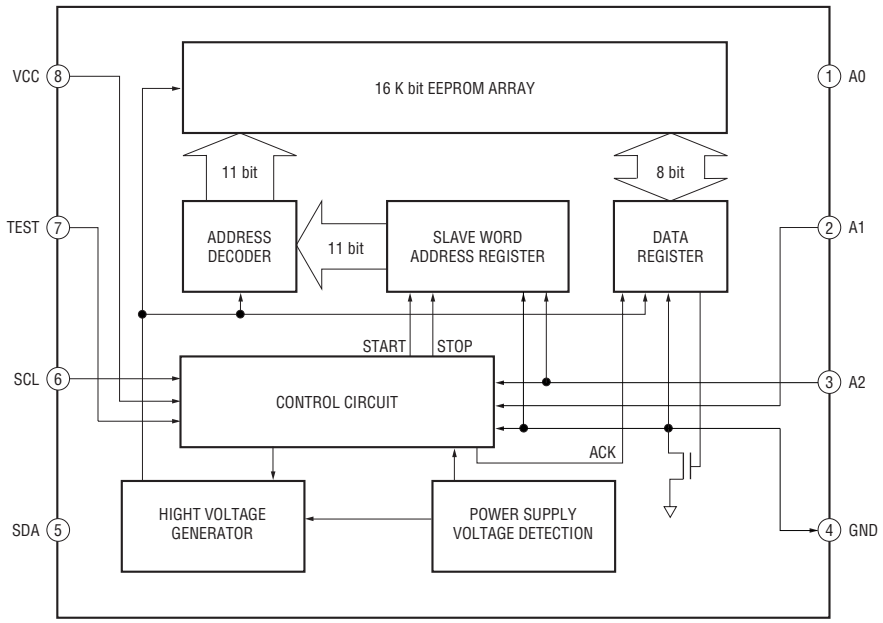

IC1301 MM1568 (I/O BOARD)

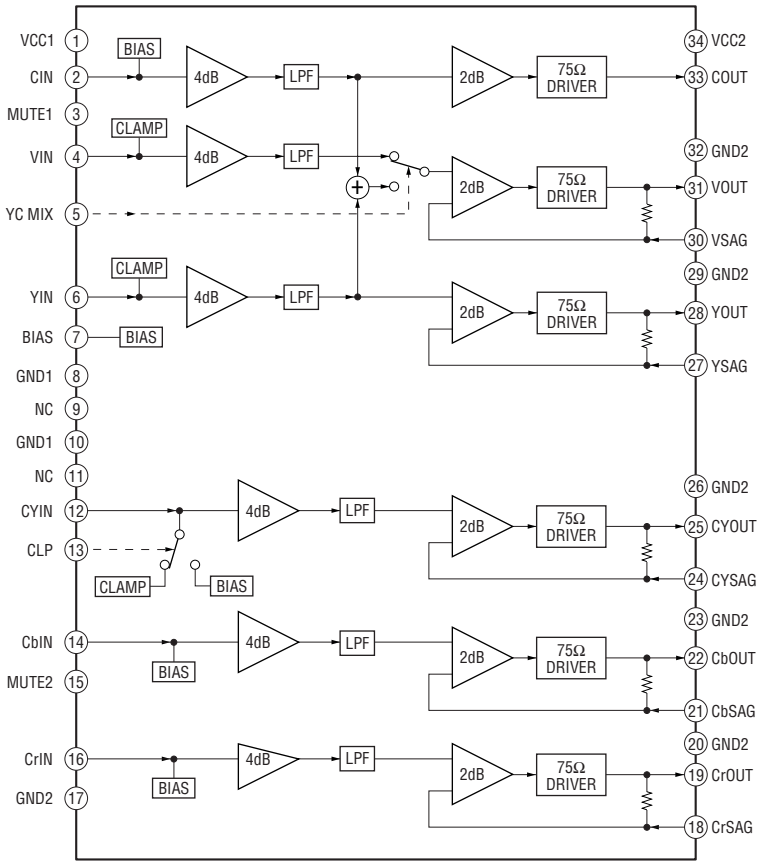

IC1302 NJM2235M-TE2 (I/O BOARD)

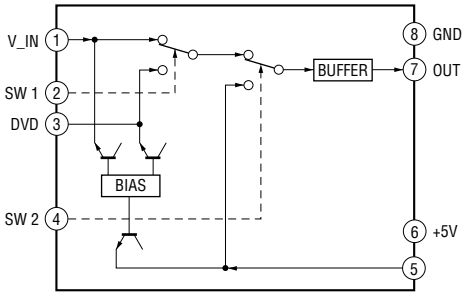

IC1304 SN74LV125ANSR (I/O BOARD)

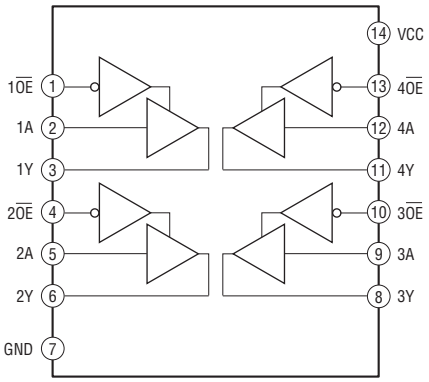

IC400, IC500, IC600 uPC2581V-S (MAIN BOARD)

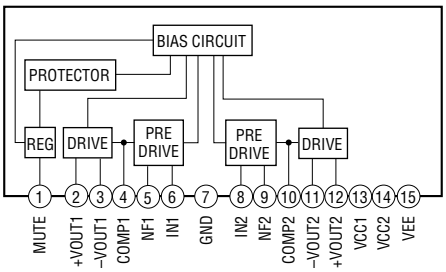

IC830, IC831 BA6956AN (MAIN BOARD)

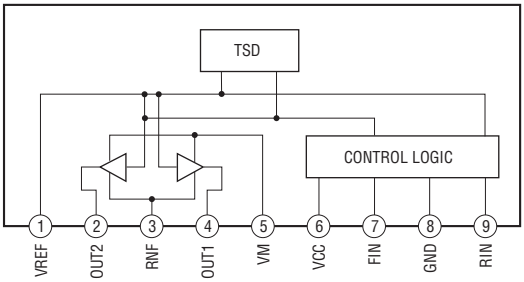

IC905 NJM2103D (MAIN BOARD)

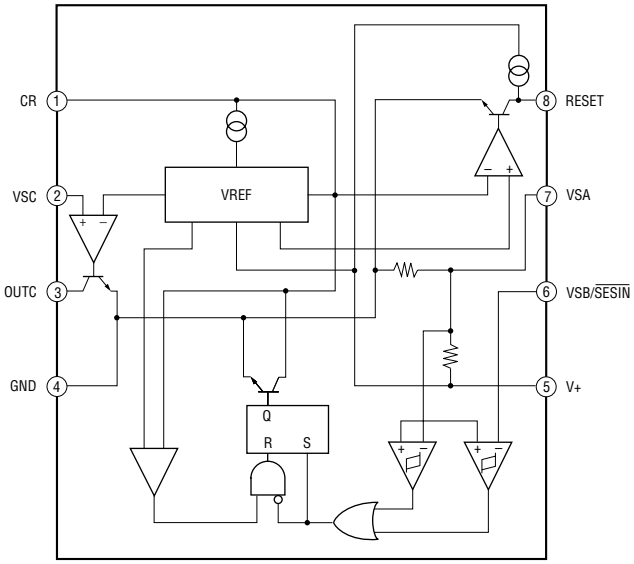

IC906 SI-8033JF (MAIN BOARD)

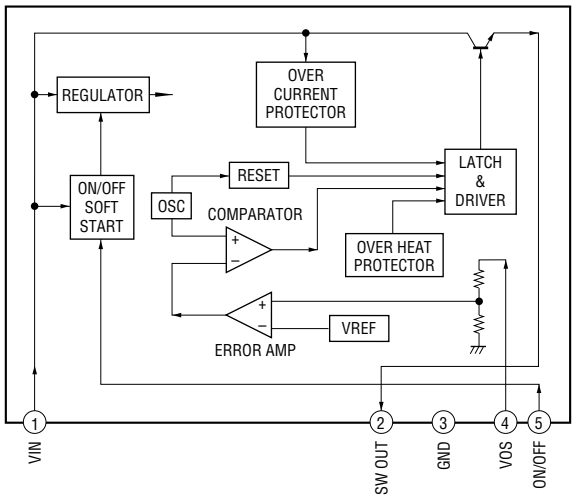

IC100 PT6315 (DISPLAY BOARD)

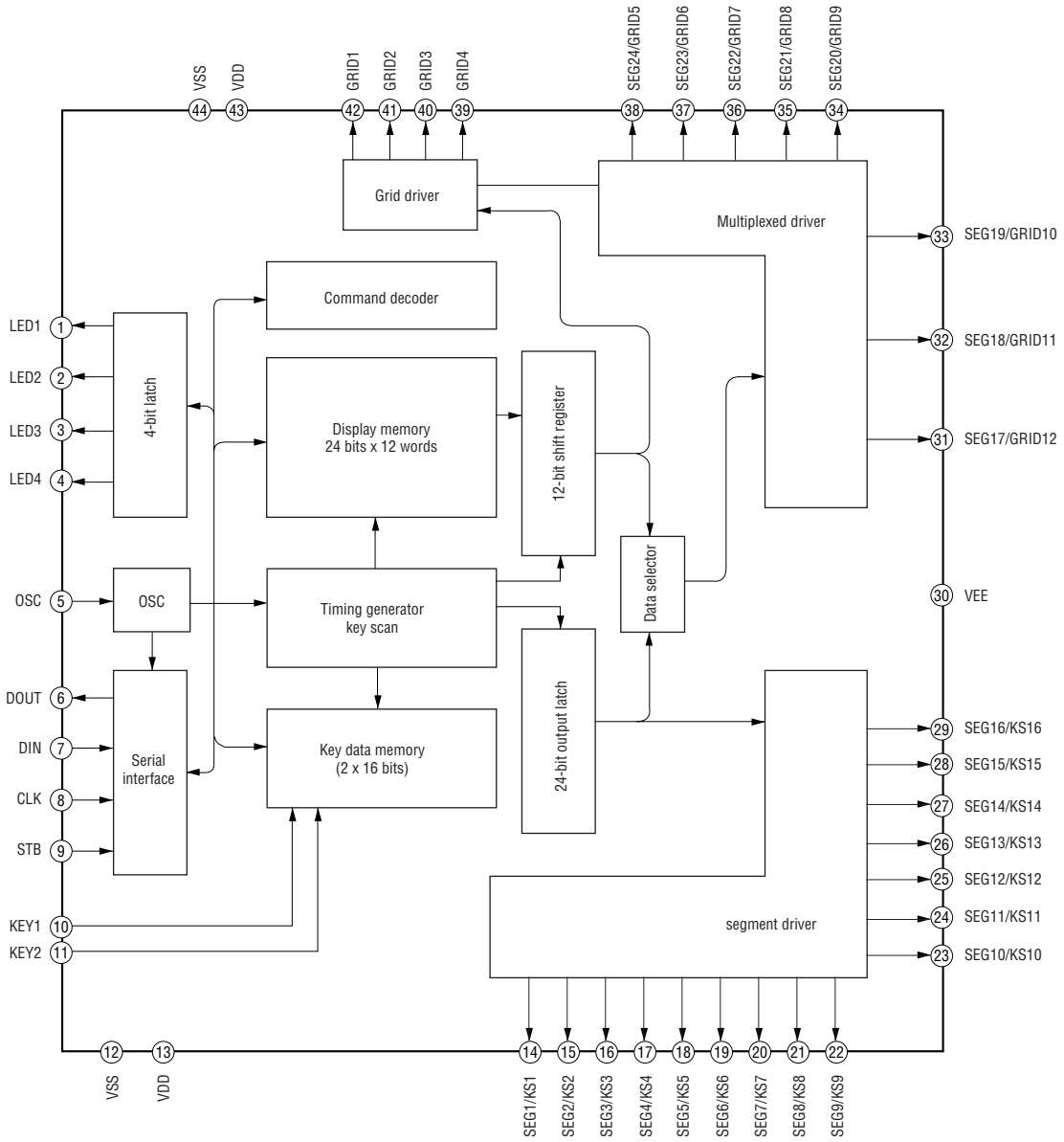

IC101 IC NJU3716M-T2, IC101 NJU3716M-TE2 (DISPLAY BOARD)

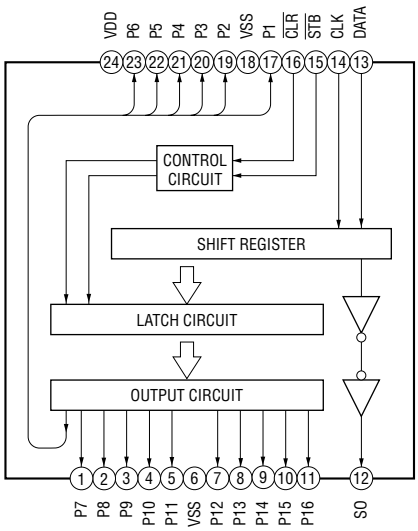

4-26. IC Pin Function Description

• IC207 ZIVA5X-C1F (DVD SYSTEM PROCESSOR)(DMB03 BOARD)

Pin No.	Pin Name	I/O	Description
1	VDDP	—	Power supply terminal (+3.3V) (I/O signal)
2	HA1	I/O	Address bus
3	HAD15	I/O	Data bus (address signal multiplexed)
4	HAD14	I/O	Data bus (address signal multiplexed)
5	HAD13	I/O	Data bus (address signal multiplexed)
6	HAD12	I/O	Data bus (address signal multiplexed)
7	HAD11	I/O	Data bus (address signal multiplexed)
8	HAD10	I/O	Data bus (address signal multiplexed)
9	HAD9	I/O	Data bus (address signal multiplexed)
10	HAD8	I/O	Data bus (address signal multiplexed)
11	HAD7	I/O	Data bus (address signal multiplexed)
12	VDDP	—	Power supply terminal (+3.3V) (I/O signal)
13	GNDP	—	Ground terminal (I/O signal)
14	HAD6	I/O	Data bus (address signal multiplexed)
15	HAD5	I/O	Data bus (address signal multiplexed)
16	HAD4	I/O	Data bus (address signal multiplexed)
17	HAD3	I/O	Data bus (address signal multiplexed)
18	HAD2	I/O	Data bus (address signal multiplexed)
19	HAD1	I/O	Data bus (address signal multiplexed)
20	VDDP	—	Power supply terminal (+3.3V) (I/O signal)
21	GNDP	—	Ground terminal (I/O signal)
22	HAD0	I/O	Data bus (address signal multiplexed)
23	HDTACK	I/O	Acknowledge signal input/output for host data transfer (not used)
24	HIRQ0	I	Interrupt signal input for Medusa (not used)
25	WEH.UDS	I/O	Host upper data strobe signal output
26	WEL.LDS	I/O	Host lower data strobe signal output (not used)
27	HREAD	I/O	Read/write strobe signal output
28	GPIO0	I/O	Jig detection port (pull-up)
29	GND	—	Ground terminal (inside core)
30	VDD	—	Power supply terminal (+1.8V) (inside core)
31	GND25	—	Ground terminal (SDRAM I/O signal)
32	VDD25	—	Power supply terminal (+3.3V) (SDRAM I/O signal)
33	MA9	O	SDRAM address bus
34	MA8	O	SDRAM address bus
35	MA7	O	SDRAM address bus
36	MA6	O	SDRAM address bus
37	MA5	O	SDRAM address bus
38	MA4	O	SDRAM address bus
39	MA3	O	SDRAM address bus
40	MA2	O	SDRAM address bus
41	MA1	O	SDRAM address bus
42	MA0	O	SDRAM address bus
43	GND25	—	Ground terminal (SDRAM I/O signal)
44	VDD25	—	Power supply terminal (+3.3V) (SDRAM I/O signal)
45	MA10	O	SDRAM address bus
46	MA11	O	SDRAM address bus
47	BA1	O	SDRAM bank select 1 signal output
48	BA0	O	SDRAM bank select 0 signal output
49	MCS0	O	SDRAM chip select 0 signal output
50	MCS1	O	Not used

Pin No.	Pin Name	I/O	Description
51	MRAS	O	SDRAM row address strobe signal output
52	MCAS	O	SDRAM column address strobe signal output
53	MWE	O	SDRAM write enable signal output (“H” : read, “L” : write)
54	GND25	—	Ground terminal (SDRAM I/O signal)
55	VDD25	—	Power supply terminal (+3.3V) (SDRAM I/O signal)
56	MCLK	O	SDRAM Clock output
57	MD0	I/O	SDRAM data
58	MD1	I/O	SDRAM data
59	MD2	I/O	SDRAM data
60	MD3	I/O	SDRAM data
61	GND25	—	Ground terminal (SDRAM I/O signal)
62	MDQM0	O	Byte read /write mask signal 0 output
63	VDD25	—	Power supply terminal (+3.3V) (SDRAM I/O signal)
64	MD4	I/O	SDRAM data
65	MD5	I/O	SDRAM data
66	MD6	I/O	SDRAM data
67	MD7	I/O	SDRAM data
68	MD8	I/O	SDRAM data
69	MD9	I/O	SDRAM data
70	MD10	I/O	SDRAM data
71	MD11	I/O	SDRAM data
72	GND25	—	Ground terminal (SDRAM I/O signal)
73	MDQM1	O	Byte read /write mask signal 1 output
74	VDD25	—	Power supply terminal (+3.3V) (SDRAM I/O signal)
75	MD12	I/O	SDRAM data
76	MD13	I/O	SDRAM data
77	MD14	I/O	SDRAM data
78	MD15	I/O	SDRAM data
79	GND	—	Ground terminal (inside core)
80	VDD	—	Power supply terminal (+1.8V) (inside core)
81	MD16	I/O	SDRAM data
82	MD17	I/O	SDRAM data
83	MD18	I/O	SDRAM data
84	MD19	I/O	SDRAM data
85	GND25	—	Ground terminal (SDRAM I/O signal)
86	MDQM2	O	Byte read /write mask signal 2 output
87	VDD25	—	Power supply terminal (+3.3V) (SDRAM I/O signal)
88	MD20	I/O	SDRAM data
89	MD21	I/O	SDRAM data
90	MD22	I/O	SDRAM data
91	MD23	I/O	SDRAM data
92	MD24	I/O	SDRAM data
93	MD25	I/O	SDRAM data
94	MD26	I/O	SDRAM data
95	MD27	I/O	SDRAM data
96	GND25	—	Ground terminal (SDRAM I/O signal)
97	MDQM3	O	Byte read /write mask signal 3 output
98	VDD25	—	Power supply terminal (+3.3V) (SDRAM I/O signal)
99	MD28	I/O	SDRAM data
100	MD29	I/O	SDRAM data

Pin No.	Pin Name	I/O	Description
101	MD30	I/O	SDRAM data
102	MD31	I/O	SDRAM data
103	GND25	—	Ground terminal (SDRAM I/O signal)
104	VDD25	—	Power supply terminal (+3.3V) (SDRAM I/O signal)
105	VCLK	I/O	System clock (not used)
106	XCK_I/O_SEL	I/O	5.1ch/downmix switch signal output
107	VS	O	S1 signal output (not used)
108	I/P SW	O	Progressive/interlace switch signal output (not used)
109	CDSEL	O	CD-DA selection signal output (not used)
110	MREQ	O	Audio muting request signal output
111	VDDP	—	Power supply terminal (+3.3V) (I/O signal)
112	GNDP	—	Ground terminal (I/O signal)
113	MDI	O	Serial data output to the D/A converter (IC302)
114	MC	O	Serial data clock output to the D/A converter (IC302)
115	ML	O	Latch enable signal output to the D/A converter (IC302)
116	HIRQ2_	I	Busy signal input from the EEPROM (IC204)
117	VDAC_4B	—	Video DAC bias bit 4 (connected to the ground)
118	VDAC_VDD4	—	Power supply terminal (+3.3V) (Video DAC 4)
119	VDAC_4	O	VDAC output 4
120	VDAC_3B	—	Video DAC bias bit 3 (connected to the ground)
121	VDAC_VDD3	—	Power supply terminal (+3.3V) (Video DAC 3)
122	VDAC_3	O	VDAC output 3
123	VDAC_2B	—	Video DAC bias bit 2 (connected to the ground)
124	VDAC_VDD2	—	Power supply terminal (+3.3V) (Video DAC 2)
125	VDAC_2	O	VDAC output 2
126	VDAC_1B	—	Video DAC bias bit 1 (connected to the ground)
127	VDAC_VDD1	—	Power supply terminal (+3.3V) (Video DAC 1)
128	VDAC_1	O	VDAC output 1 (not used)
129	VDAC_0B	—	Video DAC bias bit 0 (connected to the ground)
130	VDAC_VDD0	—	Power supply terminal (+3.3V) (Video DAC 0)
131	VDAC_0	O	VDAC output 0
132	VDAC_DVSS	—	Ground terminal (Video DAC digital system)
133	VDAC_DVDD	—	Power supply terminal (+3.3V) (Video DAC digital system)
134	VDAC_REFVDD	—	Power supply terminal (Video DAC reference)
135	VDAC_REF	I	Reference voltage input terminal(for Video DAC)
136	VDAC_REFVSS	—	Ground terminal (Video DAC reference)
137	XVSS	—	Ground terminal (crystal oscillator)
138	XOUT	O	Crystal oscillation signal output (not used)
139	XIN	I	Crystal oscillation signal input
140	XVDD	—	Power supply terminal (crystal oscillator)
141	AVSS2	—	Ground terminal (analog PLL)
142	AVDD2	—	Power supply terminal (+3.3V) (analog PLL)
143	AVDD1	—	Power supply terminal (+3.3V) (analog PLL)
144	AVSS1	—	Ground terminal (analog PLL)
145	VDD	—	Power supply terminal (+1.8V) (inside core)
146	GND	—	Ground terminal (inside core)
147	XCK	O	Audio system clock output
148	LRCK	O	LRCK signal output for audio
149	BCK	O	BCK signal output for audio
150	DATA0(DM)	O	Audio data(Down Mix signal) output

Pin No.	Pin Name	I/O	Description
151	DATA1(FLR)	O	Audio data(Front L/R signal) output
152	VDDP	—	Power supply terminal (+3.3V) (I/O signal)
153	GNDP	—	Ground terminal (I/O signal)
154	DATA2(SLR)	O	Audio data(Rear L/R signal) output
155	DATA3(CSW)	O	Audio data(Center/Subwoofer signal) output
156	IEC958	O	S/PDIF signal (not used)
157	DAI_DATA	I	Data input from ADC (not used)
158	DAI_BCK	I	BCK signal input from ADC (not used)
159	DAI_LRCK	I	LRCK signal input from ADC (not used)
160	I2C_CL	I/O	I2C clock bus
161	I2C_DA	I/O	I2C data bus
162	CS(ZIVA_E2P)	O	Chip select signal output to the EEPROM (IC204)
163	RXD1	I	Serial data input for check jig
164	TXD1	O	Serial data output for check jig
165	WRITE_CTRL(ZIVA_E2P)	O	Write control signal output to the EEPROM (IC204)
166	GNDP	—	Ground terminal (I/O signal)
167	VDDP	—	Power supply terminal (+3.3V) (I/O signal)
168	SDDATA7	I	SDBus data7 input
169	SDDATA6	I	SDBus data6 input
170	SDDATA5	I	SDBus data5 input
171	SDDATA4	I	SDBus data4 input
172	GND	—	Ground terminal (inside core)
173	VDD	—	Power supply terminal (+1.8V) (inside core)
174	SDDATA3	I	SDBus data3 input
175	SDDATA2	I	SDBus data2 input
176	SDDATA1	I	SDBus data1 input
177	SDDATA0	I	SDBus data0 input
178	SDREQ	O	SDBus data request signal output
179	SDEN	I	SDBus data enable signal input
180	GNDP	—	Ground terminal (I/O signal)
181	VDDP	—	Power supply terminal (+3.3V) (I/O signal)
182	SDERROR	I	SDBus data error signal input
183	SDCLK	I	SDBus data clock input
184	HIRQ1	I	Interrupt signal input from the mechanism controller (IC901)
185	DRVCLK	I	Serial data clock input from the mechanism controller (IC901)
186	DRVTX	I	Serial data input from the mechanism controller (IC901) and the EEPROM (IC204)
187	DRVRX	O	Serial data output to the mechanism controller (IC901) and the EEPROM (IC204)
188	DRVRDY	I	Ready signal input from the mechanism controller (IC901)
189	VNW	—	Power supply for 5V tolerance voltage input
190	ALE	O	Latch enable signal output for address data demux
191	RST_SPC	O	Reset signal output to the mechanism controller (IC901)
192	INT/EXT	O	Input selection signal output for SDBus or ADC
193	HCS2	O	Chip select signal output for Medusa (not used)
194	HCS1	I/O	Not used
195	HCS0	O	Chip select signal output to the external ROM (IC206)
196	VDDP	—	Power supply terminal (+3.3V) (I/O signal)
197	TRST	I	Reset signal input
198	TDO	O	Data output
199	TDI	I	Data input
200	TMS	I	TMS signal input

Pin No.	Pin Name	I/O	Description
201	TCK	I	TCK signal input
202	RESET	I	ZIVA reset input
203	BUS CLK	I/O	Not used
204	GND	—	Ground terminal (inside core)
205	VDD	—	Power supply terminal (+1.8V) (inside core)
206	HA3	I/O	Address bus 3
207	HA2	I/O	Address bus 2
208	GNDP	—	Ground terminal (I/O signal)

• IC901 CX973F064R-1 (MECHANISM CONTROLLER)(DMB03 BOARD)

Pin No.	Pin Name	I/O	Description
1	NO USE	O	Not used
2	SDEN	O	Serial data enable signal output to DVD/CD RF amplifier
3	DOCTRL/ ISBTEST	O	Digital out on/off control signal output to the digital signal processor “L”: digital out off, “H”: digital out on
4	XPST 2753	O	Not used
5	SDA EEP	I/O	Two-way data bus with the EEPROM
6	MNT1	I	EEPROM ready signal input from the DVD decoder
7	FCS JMP 1	O	Focus jump 1 signal output to the motor/coil driver
8	FCS JMP 2	O	Focus jump 2 signal output to the motor/coil driver
9	SENS CD	I	Internal status (SENSE) signal input from the digital signal processor
10	CDSP2	O	Loading motor drive signal (loading in direction) output terminal
11	CDSP4	O	Loading motor drive signal (loading out direction) output terminal
12	XCS DVD	O	Chip select signal output to the DVD decoder
13	VSS	—	Ground terminal (digital system)
14 to 21	D0 to D7	I/O	Two-way data bus with the DVD decoder
22	INIT0 DVD	I	Interrupt signal input from the DVD decoder
23	INIT1 DVD	I	Interrupt signal input from the DVD decoder
24	MSCK SAMBA	O	Serial data transfer clock signal output to the DSD decoder
25	XRST 1882	O	Reset signal output to the DVD decoder “L”: reset
26	SCOR	I	Subcode sync (S0+S1) detection signal input from the digital signal processor
27	LAT CD	O	Serial data latch pulse signal output to the digital signal processor
28	LD ON	O	Laser diode on/off control signal output to the DVD/CD RF amplifier “L”: laser diode off, “H”: laser diode on
29	MIRR	I	Mirror signal input from the digital signal processor
30	COUT CD	I	Numbers of track counted signal input from the digital signal processor
31	INLIM	I	Detection signal input from limit in switch The optical pick-up is inner position when “H”
32	CS ZIVA	O	Chip select signal output to the DVD system processor
33	SI ZIVA	I	Serial data input from the DVD system processor
34	SO ZIVA	O	Serial data output to the DVD system processor
35	SCK ZIVA	O	Serial data transfer clock signal output to the DVD system processor
36	DRVIRQ	O	Interrupt request signal output to the DVD system processor
37	DRVRDY	O	Ready signal output to the DVD system processor
38	RST	I	System reset signal input from the DVD system processor “L”: reset
39	VSS	—	Ground terminal (digital system)
40	XTAL	I	System clock input terminal (20 MHz)
41	EXTAL	O	System clock output terminal (20 MHz)
42	VDD	—	Power supply terminal (+3.3V) (digital system)
43, 44	SLED A, SLED B	O	Sled motor drive signal output
45	SCK DSD	O	Output terminal for offset adjustment of APEO
46	SDOUT DSD	O	Serial data output to the DSD decoder
47	SDIN DSD	I	Serial data input from the DSD decoder
48	READY DSD	I	Ready signal input from the DSD decoder “L”: ready
49	DATA CD	O	Serial data output to the digital signal processor
50	CLOK CD	O	Serial data transfer clock signal output to the digital signal processor
51	XMSLAT	O	Serial data latch pulse signal output to the DSD decoder
52	SQSO	I	Subcode Q data input from the digital signal processor
53	MUTE DSD	O	Muting on/off control signal output to the DSD decoder “H”: muting on
54	SQCK	O	Subcode Q data reading clock signal output to the digital signal processor
55	VSS	—	Ground terminal (digital system)
56	CONTROL 4	I	Disc tray in detection signal input terminal Not used

Pin No.	Pin Name	I/O	Description
57	CONTROL 2	I	Disc tray out detection signal input terminal Not used
58	GFS DVD	I	Guard frame sync signal input from the DVD decoder
59	MUTE CD	O	Muting on/off control signal output to the digital signal processor "H": muting on
60	MUTE 2D	O	Muting on/off control signal output to the motor/coil driver "H": muting on
61	SLED	I	Sled motor servo drive PWM signal input terminal
62	FG	I	Spindle motor control signal input
63	SP ON	O	Muting on/off control signal output to the motor/coil driver "H": muting on
64	JIT	I	Jitter signal input
65	TE	I	Tracking error signal input from the DVD/CD RF amplifier
66	PI	I	Pull in signal input from the DVD/CD RF amplifier
67	FE	I	Focus error signal input from the DVD/CD RF amplifier
68	AVSS	—	Ground terminal (for A/D converter)
69	AVREF	I	Reference voltage input terminal (for A/D converter)
70	AVDD	—	Power supply terminal (+3.3V) (for A/D converter)
71	GFS CD	I	Guard frame sync signal input from the digital signal processor
72	SCLK CD	O	SENSE serial data reading clock signal output to the digital signal processor
73	TSD	O	Thermal shut down signal output to the motor/coil driver
74	FOK CD	I	Focus OK signal input from the digital signal processor
75	LOCK CD	I	GFS is sampled by 460 Hz "H" input when GFS is "H"
76	LDSEL	O	Laser diode selection signal output
77	SACD/DVD	O	"SACD/DVD selection signal output "L": DVD, "H": SACD"
78	I2C SIO	I/O	Communication data bus with the DVD system processor and system controller
79	I2C SCL	I/O	Communication data reading clock signal input or transfer clock signal output with the DVD system processor and system controller
80	RXD	I	Serial data input from the RS-232C (for check)
81	TXD	O	Serial data output to the RS-232C (for check)
82	SDCLK RF	O	Serial data transfer clock signal output to the DVD/CD RF amplifier
83	SDATA RF	I/O	Two-way data bus with the DVD/CD RF amplifier
84	XWR	O	Write strobe signal output to the DVD decoder
85	XRD	O	Read strobe signal output to the DVD decoder
86	(PWE)	—	Not used
87	VDD	—	Power supply terminal (+3.3V) (digital system)
88	VSS	—	Ground terminal (digital system)
89 to 96	A0 to A7	O	Address signal output to the DVD decoder
97	DSAVE	O	Motor/coil driver power save control signal output terminal
98	XDRST	O	Reset signal output to the digital signal processor and DSD decoder "L": reset
99	WP EEP	O	Write protect signal output to the EEPROM
100	SCL EEP	O	Clock signal output to the EEPROM

• **IC901 μPD703033BYGF-M15-3BA (SYSTEM CONTROLLER)(MAIN BOARD)**

Pin No.	Pin Name	I/O	Description
1	TUN_CLK	O	Clock output to the tuner
2	TUN_LATCH	O	Latch signal output to the tuner
3	I2C_DATA	I/O	I2C data input/output
4	ZIVA_RST	O	Reset signal output to the DVD system processor (IC207)
5	I2C_CLK	I/O	I2C clock input/output
6	DSP_DOUT	I	Not used (open)
7	DSP_ERROR	O	Not used (open)
8	DSP_EXLOCK	O	Not used (open)
9	EVDD	—	Power supply terminal (port)
10	EVSS	—	Ground terminal (port)
11	TUN_MUTE	O	Muting signal output to the tuner
12	FAN ON_H	I	Fan control signal input for high speed
13	FANH_SPEED	O	Fan motor speed control signal output for high speed
14	DSP_HCE	O	Not used (open)
15	DSP_ACK	I	Not used (open)
16	DSP_BST	O	Not used (open)
17	DSP_DECODE	I	Not used (fixed at “L”)
18	DIR_HCE	I	Not used (open)
19	DIR_ERR	I	Not used (open)
20	DIR_RST	O	Not used (open)
21	VPP	—	Power supply for programming
22	DIR_INT	I	Not used (open)
23	DIR_HDIN	O	Not used (open)
24	DIR_HCLK	O	Not used (open)
25	DIR_HDOUT	I	Not used (open)
26	2PIN	I	Not used (open)
27	COMP_MUTE	O	Component video signal muting signal output to the video amplifier and driver (IC1301)
28	VIDEO_MUTE	O	Video signal muting signal output to the video amplifier and driver (IC1301)
29	FUNC_MUTE	O	Audio muting signal output
30	FAN ON	O	Not used
31	F_SPEED	O	Not used
32	PWR RY	O	Main power relay control signal output
33	M_CH_LED	O	Multi channel decoding LED control signal output
34	RESET	I	System reset signal input
35	XT1	—	Not used (open)
36	XT2	—	Not used (open)
37	REGC	—	Regulator output stabilization capacitance connection terminal
38	X1	—	Resonator connection terminal for main clock (20MHz)
39	X2	—	Resonator connection terminal for main clock (20MHz)
40	VSS	—	Ground terminal
41	VDD	—	Power supply terminal
42	CLKOUT	—	Not used (open)
43	DIR_XSTATE	O	Not used (open)
44	HP_SW	I	Headphone plug insert detection signal input
45	VSW1	O	Not used (open)
46	VSW2	O	Video signal selection control signal output to the video input selector (IC1302)
47	VOL_DATA	O	Data output to the sound processor (IC1312) and the audio input selector (IC1303)
48	VOL_CLK	O	Clock output to the sound processor (IC1312) and the audio input selector (IC1303)
49	PROG_SW	I	Not used (fixed at “L”)
50	STBY_LED	O	Not used (open)

Pin No.	Pin Name	I/O	Description
51	FL_DATA	O	Data output to the FL driver (IC100)
52	FL_CLK	O	Clock output to the FL driver (IC100)
53	FL_LATCH	O	Latch signal output to the FL driver (IC100)
54	HP_REY	O	Headphone relay control signal output
55	FRONT_REY	O	Front speaker relay control signal output
56	SUR_REY	O	Rear speaker relay control signal output
57	C_REY	O	Center speaker relay control signal output
58	BVDD	—	Power supply terminal (bus interface)
59	BVSS	—	Ground terminal (bus interface)
60	CKMP	O	Tray open/close control signal output to the loading motor driver (IC831)
61	CKMM	O	Tray open/close control signal output to the loading motor driver (IC831)
62	LED_CLR	O	Reset signal output to the LED driver (IC101)
63	LED_LATCH	O	Latch signal output to the LED driver (IC101)
64	LED_CLK	O	Clock output to the LED driver (IC101)
65	LED_DATA	O	Data output to the LED driver (IC101)
66	RDS_DATA	—	Not used (fixed at “L”)
67	TRMM	O	Table left/right control signal output to the table motor driver (IC830)
68	TRMP	O	Table left/right control signal output to the table motor driver (IC830)
69	TUNED	I	Tuner tuned status signal input from the tuner
70	RDS_DETECT	—	Not used (fixed at “L”)
71	FAN_DETECT	I	Fan on detection signal input
72	STEREO	I	Stereo/mono detection signal input from the tuner
73	TUNDI	O	Data output to the tuner
74	AVDD	—	Power supply terminal (analog)
75	AVSS	—	Ground terminal (analog)
76	AVREF	—	Analog reference voltage for D/A converter
77 to 79	S0 to S2	I	Tray position detection signal input
80, 81	AREA1, AREA2	I	Destination selection terminal
82 to 84	KEY0 to KEY2	I	Key input
85	ENA	I	Volume signal input from the rotary encoder
86	ENB	I	Volume signal input from the rotary encoder
87	TUNDO	I	Data input from the tuner
88	PROTECTOR	I	Protection signal input from the power amplifier circuit
89	DVD_POWER	O	DVD power supply on/off control signal output
90	STOP	I	AC power supply stop signal input
91	POWER_SW	I	Power switch detection signal input
92	SIRCS	I	Remote control signal input from the remote control receiver (IC102)
93	WAKE	I	Wake up signal input from the power switch detection circuit and the remote control detection circuit
94	M_REQ	I	Muting request signal input from the DVD system processor (IC207)
95	DSENS	I	Disc detection signal input
96	TSENS	I	Table slit-edge detection signal input
97	DF IL_SW	I	Input for flash writing
98	DF_IL_SYNC	O	Output for flash writing
99	FLSH_SCK	O	Clock for flash writing
100	I2CHLP	I/O	Not used (fixed at “L”)

SECTION 5
EXPLODED VIEWS

NOTE:
- -XX, -X mean standardized parts, so they may have some difference from the original one.
- Items marked "*" are not stocked since they are seldom required for routine service. Some delay should be anticipated when ordering these items.
- The mechanical parts with no reference number in the exploded views are not supplied.
- Abbreviation
  CND : Canadian model
  E51 : Chilean and peruvian models
  MX : Mexican model

The components identified by mark ⚠ or dotted line with mark ⚠ are critical for safety. Replace only with part number specified.

Les composants identifiés par une marque ⚠ sont critiques pour la sécurité. Ne les remplacer que par une pièce portant le numéro spécifié.

5-1. Case Section

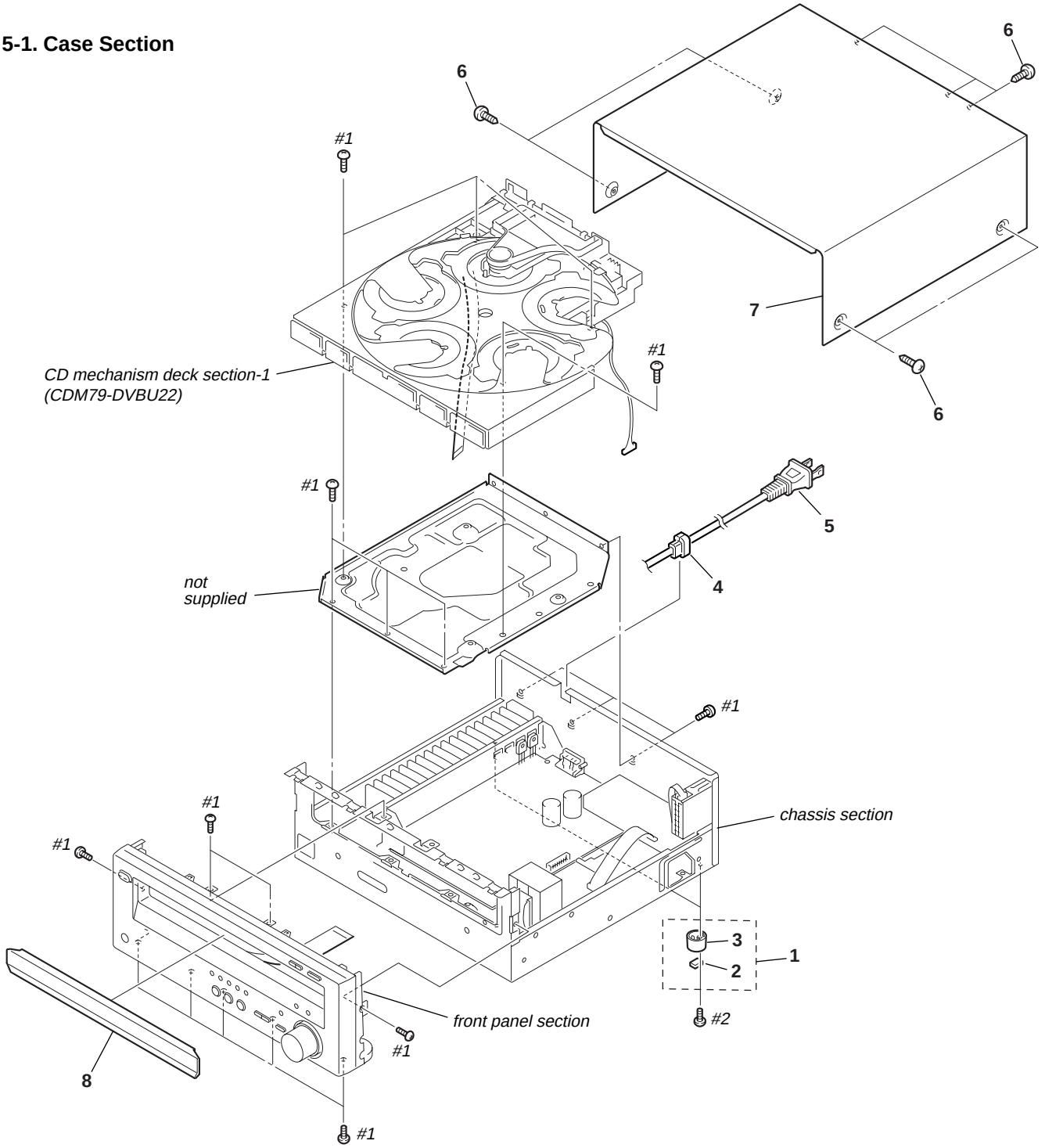

Ref. No.	Part No.	Description	Remark
1	X-4953-448-1	FOOT ASSY	
2	4-977-358-01	CUSHION	
3	4-232-237-01	FOOT (DIA. 30)	
* 4	3-703-244-00	BUSHING (2104), CORD	
⚠5	1-777-071-23	CORD, POWER (AEP,UK,E51)	
⚠5	1-783-532-11	CORD, POWER (US,CND,MX)	
6	4-210-291-11	SCREW (CASE 3 TP2)	
7	4-244-936-01	CASE (385)	
8	4-244-911-02	LOADING PANEL	
#1	7-685-646-79	SCREW +BUTP 3X8 TYPE2 IT-3	
#2	7-685-645-79	SCREW +BUTP 3X6 TYPE2 IT-3	

5-2. Front Panel Section

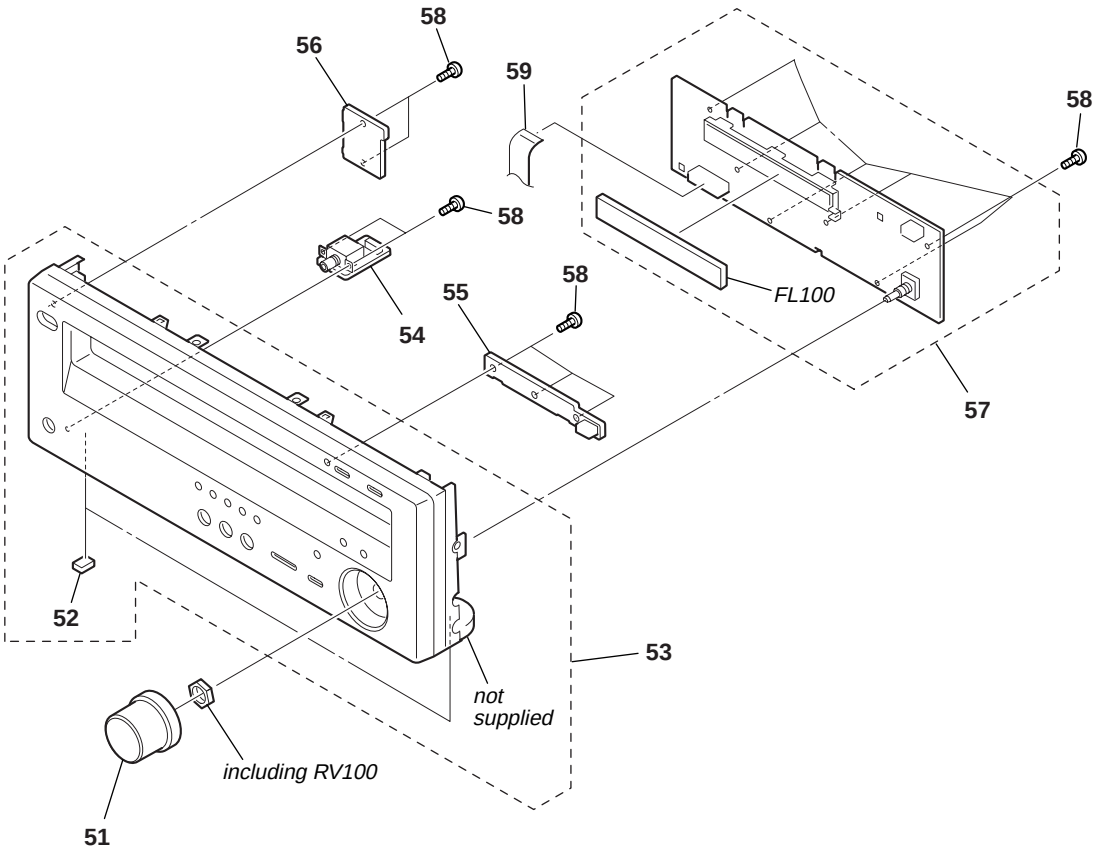

Ref. No.	Part No.	Description	Remark
51	4-232-113-12	KNOB (VOL)	
52	4-977-358-01	CUSHION	
53	X-4955-389-1	FRONT PANEL ASSY (US)	
53	X-4955-401-1	FRONT PANEL ASSY (CND)	
53	X-4955-590-A	FRONT PANEL ASSY (AEP,UK,E51,MX)	
54	1-686-960-11	HP BOARD	
55	1-686-958-11	OPEN/CLOSE BOARD	
56	1-685-957-11	POWER SWITCH BOARD	
57	A-4732-144-A	DISPLAY BOARD, COMPLETE	(US,CND,E51,MX)
57	A-4733-209-A	DISPLAY BOARD, COMPLETE (AEP,UK)	
58	4-951-620-01	SCREW (2.6X8), +BVTP	
59	1-773-217-11	WIRE (FLAT TYPE) (25 CORE)	
FL100	1-518-880-11	INDICATOR TUBE, FLUORESCENT	

5-3. Chassis Section

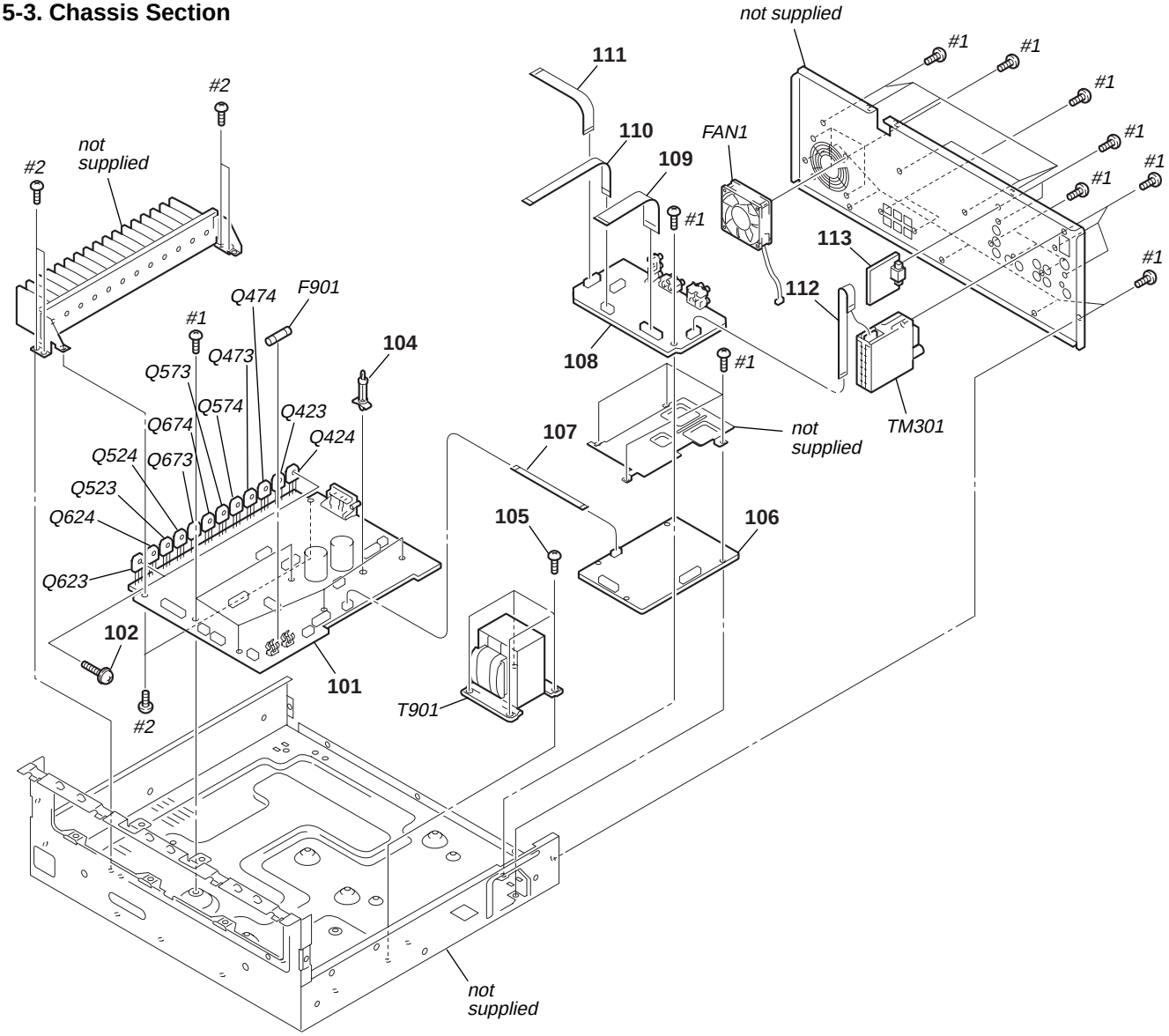

Ref. No.	Part No.	Description	Remark
101	A-4732-139-A	MAIN BOARD, COMPLETE (US,CND)	
101	A-4733-270-A	MAIN BOARD, COMPLETE (AEP,UK)	
101	A-4733-271-A	MAIN BOARD, COMPLETE (MX)	
101	A-4747-690-A	MAIN BOARD, COMPLETE (E51)	
102	3-905-609-01	SCREW (TRANSISTOR)	
* 104	4-924-098-91	HOLDER, PC BOARD	
105	4-900-386-01	SCREW	
106	A-4732-136-A	DMB03 BOARD, COMPLETE	
107	1-773-983-11	WIRE (FLAT TYPE) (5 CORE)	
108	A-4732-145-A	I/O BOARD, COMPLETE	
109	1-775-226-11	WIRE (FLAT TYPE) (25 CORE)	
110	1-769-945-11	WIRE (FLAT TYPE) (11 CORE)	
111	1-773-040-11	WIRE (FLAT TYPE) (17 CORE)	
112	1-769-945-11	WIRE (FLAT TYPE) (11 CORE)	
113	A-4747-689-A	VOLTAGE SEL BOARD, COMPLETE (E51)	
⚠ F901	1-532-504-51	FUSE T4AL/250V (E51)	
⚠ F901	1-533-420-11	FUSE, GLASS CYLINDRICAL(DIA.5) 5A/125V	(US,CND,MX)
⚠ F901	1-576-107-11	FUSE T3.15AL/250V (AEP,UK)	
FAN1	1-763-978-11	DC FAN	
Q423	8-749-010-25	IC MN2488-OPY-M	

Ref. No.	Part No.	Description	Remark
Q424	8-749-010-26	IC MP1620-OPY-M	
Q473	8-749-010-25	IC MN2488-OPY-M	
Q474	8-749-010-26	IC MP1620-OPY-M	
Q523	8-749-010-25	IC MN2488-OPY-M	
Q524	8-749-010-26	IC MP1620-OPY-M	
Q573	8-749-010-25	IC MN2488-OPY-M	
Q574	8-749-010-26	IC MP1620-OPY-M	
Q623	8-749-010-25	IC MN2488-OPY-M	
Q624	8-749-010-26	IC MP1620-OPY-M	
Q673	8-749-010-25	IC MN2488-OPY-M	
Q674	8-749-010-26	IC MP1620-OPY-M	
⚠ T901	1-437-993-11	POWER TRANSFORMER (US,CND,MX)	
⚠ T901	1-439-642-11	POWER TRANSFORMER (E51)	
⚠ T901	1-439-978-11	POWER TRANSFORMER (AEP,UK)	
TM301	1-693-577-13	TUNER UNIT (US,CND,E51,MX)	
TM301	1-693-580-13	TUNER UNIT (AEP,UK)	
#1	7-685-646-79	SCREW +BUTP 3X8 TYPE2 IT-3	
#2	7-685-645-79	SCREW +BUTP 3X6 TYPE2 IT-3	

The components identified by mark ⚠ or dotted line with mark ⚠ are critical for safety. Replace only with part number specified.	Les composants identifiés par une marque ⚠ sont critiques pour la sécurité. Ne les remplacer que par une pièce portant le numéro spécifié.

5-4. CD Mechanism Deck Section-1 (CDM79-DVBU22)

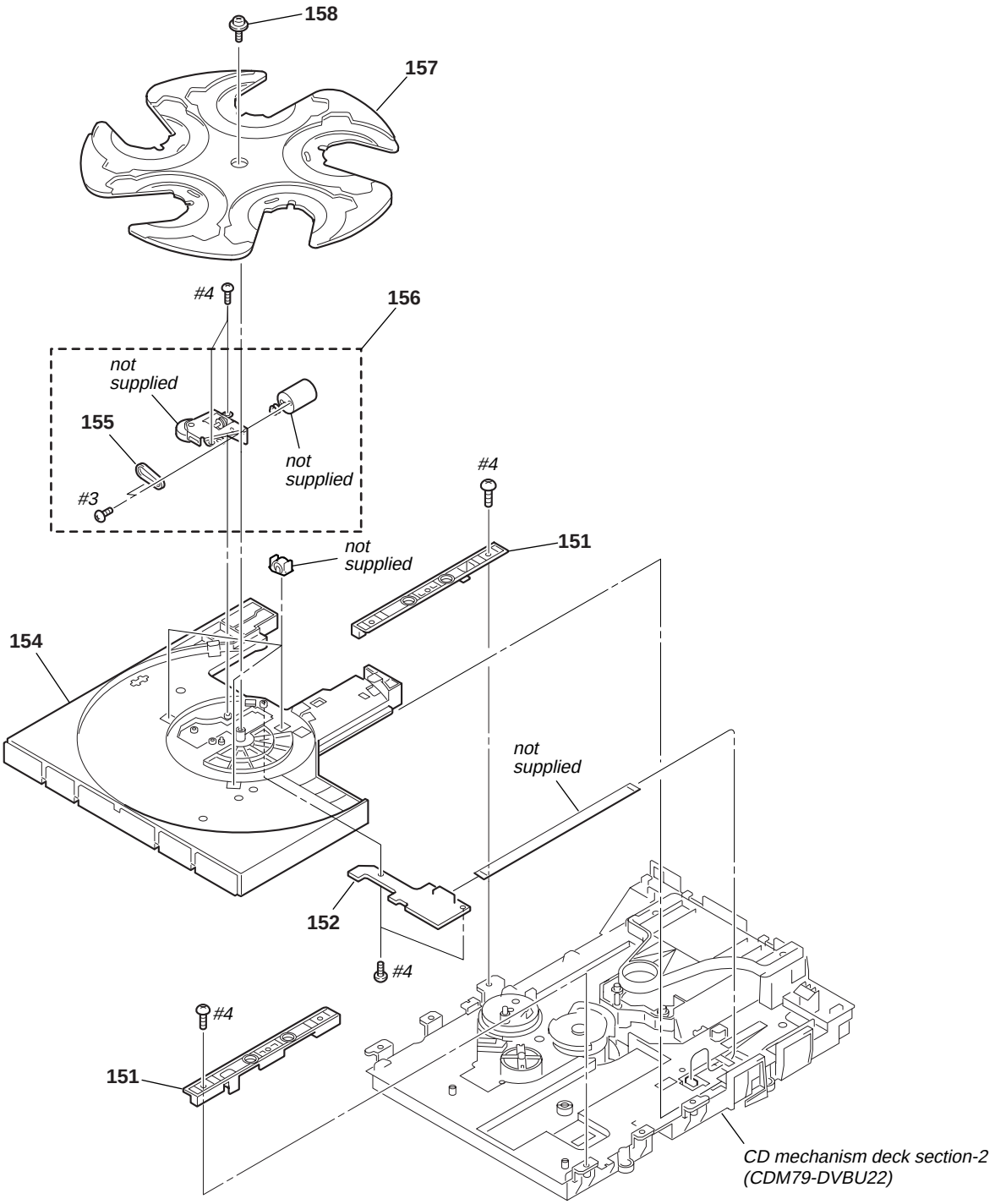

Ref. No.	Part No.	Description	Remark
151	3-074-737-01	PLATE (GUIDE)	
152	A-6060-642-A	SE-130 MOUNT	
154	3-074-716-01	TABLE	
155	3-074-725-01	BELT, TD	
156	A-6060-640-A	UNIT ASSY, TD	
157	3-074-717-01	TRAY	
158	4-218-252-51	SCREW (+PTPWH M2.6), FLOATING	
#3	7-682-544-04	SCREW +P 3X3	
#4	7-685-534-19	SCREW +BTP 2.6X8 TYPE2 N-S	

5-5. CD Mechanism Deck Section-2 (CDM79-DVBU22)

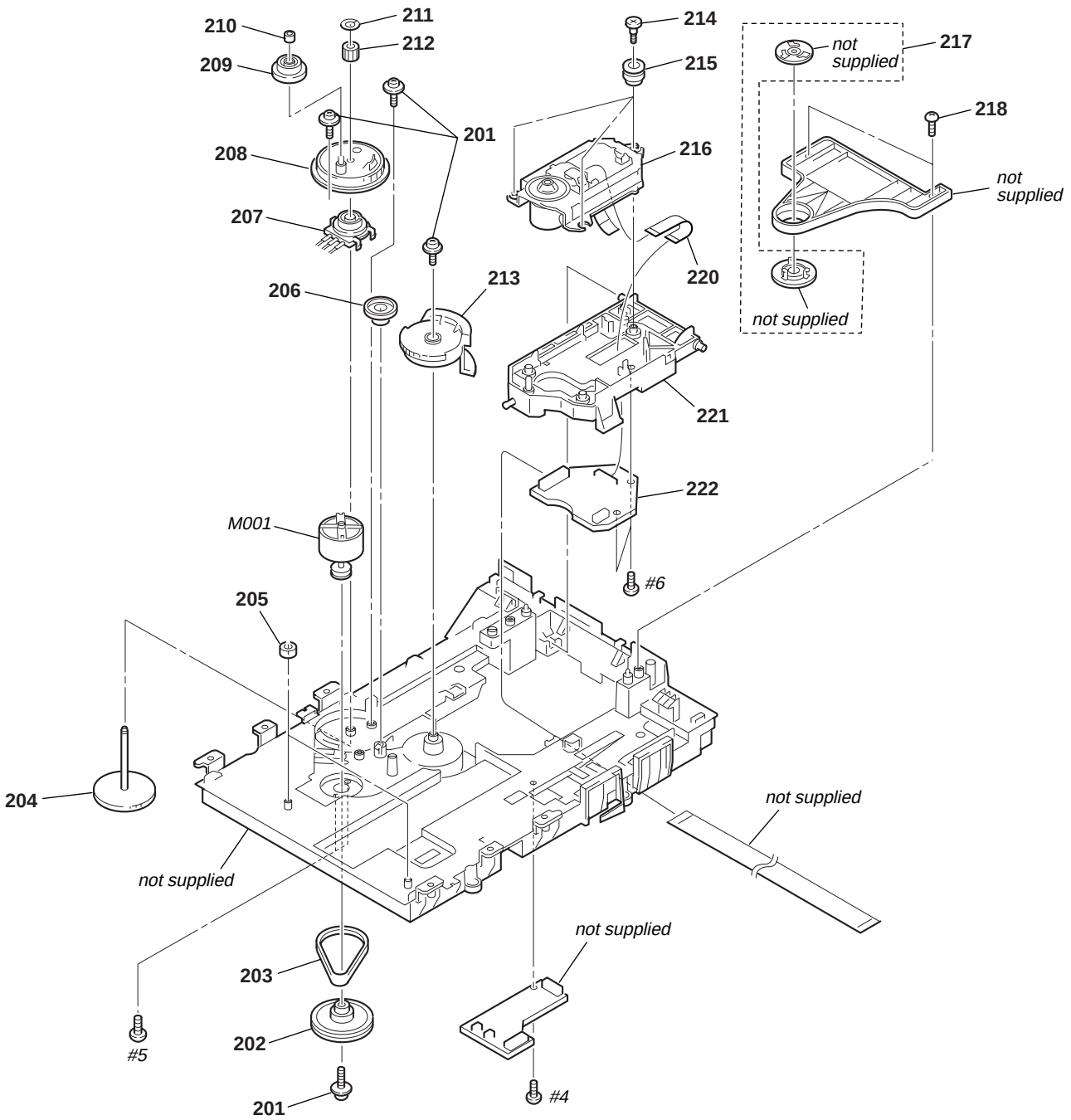

Ref. No.	Part No.	Description	Remark
201	4-218-252-51	SCREW (+PTPWH M2.6), FLOATING	
202	3-074-744-01	GEAR (LOADING A)	
203	3-074-745-01	BELT (LOADING)	
204	3-074-742-01	GEAR (SHAFT)	
205	4-951-619-01	CUSHION (A)	
206	3-074-735-01	GEAR (IDOLER)	
207	1-418-746-11	ENCODER, ROTARY	
208	3-074-741-01	GEAR (LOADING B)	
209	3-074-738-01	GEAR (SWING)	
210	3-074-739-01	COLLAR (SWING)	
211	3-016-533-01	WASHER (FR), STOPPER	
212	3-074-740-01	GEAR (LOADING C)	
213	3-074-736-01	GEAR (CHUCK)	
214	4-981-923-01	SCREW (M), STEP	

Ref. No.	Part No.	Description	Remark
215	3-053-847-31	INSULATOR	
⚠216	1-477-263-11	PICKUP UNIT (TDP022W)	
217	A-4736-882-A	CHUCK ASSY	
218	3-970-608-51	SUMITITE (B3), +BV	
220	1-824-106-12	CABLE, FLEXIBLE FLAT (24 CORE)	
221	X-4955-252-1	HOLDER (BU) ASSY	
222	A-4728-690-A	RF BOARD, COMPLETE	
M001	1-541-632-12	MOTOR, DC (TABLE)	
#4	7-685-534-19	SCREW +BTP 2.6X8 TYPE2 N-S	
#5	7-621-259-25	SCREW +P 2.6X4	
#6	7-685-535-19	SCREW +BTP 2.6X10 TYPE2 N-S	

The components identified by mark ⚠ or dotted line with mark ⚠ are critical for safety. Replace only with part number specified.	Les composants identifiés par une marque ⚠ sont critiques pour la sécurité. Ne les remplacer que par une pièce portant le numéro spécifié.

SECTION 6
ELECTRICAL PARTS LIST

DISPLAY

Note:
- Due to standardization, replacements in the parts list may be different from the parts specified in the diagrams or the components used on the set.
- -XX, -X mean standardized parts, so they may have some difference from the original one.
- Items marked "*" are not stocked since they are seldom required for routine service. Some delay should be anticipated when ordering these items.
- RESISTORS
  All resistors are in ohms
  METAL: Metal-film resistor
  METAL OXIDE: Metal Oxide-film resistor
  F : nonflammable
- CAPACITORS
  uF : µF
- COILS
  uH : µH
- SEMICONDUCTORS
  In each case, u: µ , for example:
  uA...: µA..., uPA...: µPA..., uPB...: µPB..., uPC...: µPC..., uPD...: µPD...
- Abbreviation
  CND : Canadian model
  E51 : Chilean and peruvian models
  MX : Mexican model

When indicating parts by reference number, please include the board name.

The components identified by mark ⚠ or dotted line with mark ⚠ are critical for safety. Replace only with part number specified.

Les composants identifiés par une marque ⚠ sont critiques pour la sécurité. Ne les remplacer que par une pièce portant le numéro spécifié.

Ref. No.	Part No.	Description				Remark
	A-4732-144-A	DISPLAY BOARD, COMPLETE (US,CND,E51,MX)				
		**********				
	A-4733-209-A	DISPLAY BOARD, COMPLETE (AEP,UK)				
		**********				
	4-240-061-01	HOLDER (FL)				
*	4-955-901-01	CUSHION (FL)				
		< CAPACITOR >				
C101	1-126-964-11	ELECT	10uF	20.00%	50V	
C102	1-126-947-11	ELECT	47uF	20.00%	16V	
C103	1-164-156-11	CERAMIC CHIP	0.1uF		25V	
C104	1-164-156-11	CERAMIC CHIP	0.1uF		25V	
C105	1-164-156-11	CERAMIC CHIP	0.1uF		25V	
C106	1-164-156-11	CERAMIC CHIP	0.1uF		25V	
C107	1-162-927-11	CERAMIC CHIP	100PF	5%	50V	
C108	1-162-927-11	CERAMIC CHIP	100PF	5%	50V	
C109	1-164-156-11	CERAMIC CHIP	0.1uF		25V	
C110	1-164-156-11	CERAMIC CHIP	0.1uF		25V	
C111	1-162-927-11	CERAMIC CHIP	100PF	5%	50V	
C112	1-162-927-11	CERAMIC CHIP	100PF	5%	50V	
C113	1-162-927-11	CERAMIC CHIP	100PF	5%	50V	
C114	1-164-156-11	CERAMIC CHIP	0.1uF		25V	
C115	1-164-156-11	CERAMIC CHIP	0.1uF		25V	
C144	1-165-319-11	CERAMIC CHIP	0.1uF		50V	
C145	1-165-319-11	CERAMIC CHIP	0.1uF		50V	
C153	1-162-927-11	CERAMIC CHIP	100PF	5%	50V	
C154	1-164-156-11	CERAMIC CHIP	0.1uF		25V	
C156	1-126-947-11	ELECT	47uF	20.00%	16V	
C157	1-162-927-11	CERAMIC CHIP	100PF	5%	50V	
C158	1-164-156-11	CERAMIC CHIP	0.1uF		25V	
		< CONNECTOR SOCKET >				
CNS100	1-569-325-11	SOCKET, CONNECTOR 25P				
		< DIODE >				
D100	8-719-046-39	DIODE SEL5821A-TP15 (1)				
D101	8-719-046-43	DIODE SEL5421E-TP15 (1)				
D102	8-719-046-39	DIODE SEL5821A-TP15 (2)				
D103	8-719-046-43	DIODE SEL5421E-TP15 (2)				
D104	8-719-046-39	DIODE SEL5821A-TP15 (3)				
D105	8-719-046-43	DIODE SEL5421E-TP15 (3)				
D106	8-719-046-39	DIODE SEL5821A-TP15 (4)				
D107	8-719-046-43	DIODE SEL5421E-TP15 (4)				
D108	8-719-046-39	DIODE SEL5821A-TP15 (5)				
D109	8-719-046-43	DIODE SEL5421E-TP15 (5)				
D110	8-719-084-07	DIODE SEL5E20CTP15 (MULTI CHANNEL DECODING)				
D151	8-719-988-61	DIODE 1SS355TE-17				
D152	8-719-988-61	DIODE 1SS355TE-17				
		< FERRITE BEAD >				
FB102	1-414-813-11	FERRITE	0uH			
		< FLUORESCENT INDICATOR TUBE >				
FL100	1-518-880-11	INDICATOR TUBE, FLUORESCENT				
		< IC >				
IC100	8-759-643-83	IC PT6315				
IC101	8-759-342-19	IC NJU3716M-T2 (US,CND,E51,MX)				
IC101	8-759-587-81	IC NJU3716M-TE2 (AEP,UK)				
IC102	8-759-827-69	IC NJL63H400A-1				
		< COIL >				
L100	1-412-030-11	INDUCTOR CHIP	22uH			
		< TRANSISTOR >				
Q100	8-729-900-36	TRANSISTOR	BA1F4M-TP			
Q101	8-729-900-36	TRANSISTOR	BA1F4M-TP			
Q102	8-729-900-36	TRANSISTOR	BA1F4M-TP			
Q151	8-729-119-79	TRANSISTOR	2SC2785TP-FEK			
Q152	8-729-119-79	TRANSISTOR	2SC2785TP-FEK			
Q153	8-729-119-79	TRANSISTOR	2SC2785TP-FEK			
Q154	8-729-119-79	TRANSISTOR	2SC2785TP-FEK			
		< RESISTOR >				
R100	1-216-813-11	METAL CHIP	220	5%	1/16W	
R101	1-216-813-11	METAL CHIP	220	5%	1/16W	
R102	1-216-813-11	METAL CHIP	220	5%	1/16W	
R103	1-216-813-11	METAL CHIP	220	5%	1/16W	
R104	1-216-813-11	METAL CHIP	220	5%	1/16W	
R105	1-216-833-11	METAL CHIP	10K	5%	1/16W	
R106	1-216-807-11	METAL CHIP	68	5%	1/16W	
R107	1-216-821-11	METAL CHIP	1K	5%	1/16W	
R108	1-216-821-11	METAL CHIP	1K	5%	1/16W	

DISPLAY DMB03

Ref. No.	Part No.	Description			Remarks
R109	1-216-809-11	METAL CHIP	100	5%	1/16W
R110	1-216-809-11	METAL CHIP	100	5%	1/16W
R111	1-216-809-11	METAL CHIP	100	5%	1/16W
R112	1-216-809-11	METAL CHIP	100	5%	1/16W
R113	1-216-809-11	METAL CHIP	100	5%	1/16W
R114	1-216-809-11	METAL CHIP	100	5%	1/16W
R115	1-216-844-11	METAL CHIP	82K	5%	1/16W
R116	1-216-797-11	METAL CHIP	10	5%	1/16W
R117	1-216-797-11	METAL CHIP	10	5%	1/16W
R118	1-216-809-11	METAL CHIP	100	5%	1/16W
R120	1-216-821-11	METAL CHIP	1K	5%	1/16W
R121	1-216-825-11	METAL CHIP	2.2K	5%	1/16W
R122	1-216-825-11	METAL CHIP	2.2K	5%	1/16W
R123	1-216-829-11	METAL CHIP	4.7K	5%	1/16W
R125	1-216-864-11	METAL CHIP	0	5%	1/16W
R126	1-216-821-11	METAL CHIP	1K	5%	1/16W
R127	1-216-825-11	METAL CHIP	2.2K	5%	1/16W
R128	1-216-825-11	METAL CHIP	2.2K	5%	1/16W
R131	1-216-825-11	METAL CHIP	2.2K	5%	1/16W
R132	1-216-825-11	METAL CHIP	2.2K	5%	1/16W
R133	1-216-829-11	METAL CHIP	4.7K	5%	1/16W
R134	1-216-833-11	METAL CHIP	10K	5%	1/16W
R135	1-216-837-11	METAL CHIP	22K	5%	1/16W
⚠R140	1-249-381-11	CARBON	1	5%	1/4W F
⚠R141	1-249-381-11	CARBON	1	5%	1/4W F
R150	1-216-841-11	METAL CHIP	47K	5%	1/16W
R151	1-216-809-11	METAL CHIP	100	5%	1/16W
R163	1-216-841-11	METAL CHIP	47K	5%	1/16W
R164	1-216-841-11	METAL CHIP	47K	5%	1/16W
R165	1-216-841-11	METAL CHIP	47K	5%	1/16W
R166	1-216-841-11	METAL CHIP	47K	5%	1/16W
R167	1-216-841-11	METAL CHIP	47K	5%	1/16W
R168	1-216-841-11	METAL CHIP	47K	5%	1/16W
R170	1-216-833-11	METAL CHIP	10K	5%	1/16W
R171	1-216-833-11	METAL CHIP	10K	5%	1/16W
R172	1-216-833-11	METAL CHIP	10K	5%	1/16W
		< VARIABLE RESISTOR >			
RV100	1-418-725-41	ENCODER, ROTARY (12 TYPE) (MASTER VOLUME)			
		< SWITCH >			
S100	1-771-410-21	SWITCH, TACTILE (▶)			
S101	1-771-410-21	SWITCH, TACTILE (❚❚)			
S102	1-771-410-21	SWITCH, TACTILE (■)			
S103	1-771-410-21	SWITCH, TACTILE (INPUT SELECTOR)			
S105	1-771-410-21	SWITCH, TACTILE (▶▶❙)			
S106	1-771-410-21	SWITCH, TACTILE (❙◀◀)			
S107	1-771-410-21	SWITCH, TACTILE (+ (SOUND FIELD))			
S108	1-771-410-21	SWITCH, TACTILE (- (SOUND FIELD))			
S111	1-771-410-21	SWITCH, TACTILE (1)			
S112	1-771-410-21	SWITCH, TACTILE (2)			
S113	1-771-410-21	SWITCH, TACTILE (3)			
S114	1-771-410-21	SWITCH, TACTILE (4)			
S115	1-771-410-21	SWITCH, TACTILE (5)			
S117	1-771-410-21	SWITCH, TACTILE (SUBWOOFER LEVEL)			

****

Ref. No.	Part No.	Description			Remarks
	A-4732-136-A	DMB03 BOARD, COMPLETE			
		**********			
		< CAPACITOR >			
C101	1-126-246-11	ELECT CHIP	220uF	20%	4V
C151	1-126-206-11	ELECT CHIP	100uF	20%	6.3V
C204	1-164-947-11	CERAMIC CHIP	0.01uF		50V
C205	1-164-947-11	CERAMIC CHIP	0.01uF		50V
C213	1-126-209-11	ELECT CHIP	100uF	20.00%	4V
C214	1-164-947-11	CERAMIC CHIP	0.01uF		50V
C215	1-164-947-11	CERAMIC CHIP	0.01uF		50V
C216	1-164-947-11	CERAMIC CHIP	0.01uF		50V
C218	1-164-947-11	CERAMIC CHIP	0.01uF		50V
C220	1-164-947-11	CERAMIC CHIP	0.01uF		50V
C226	1-107-820-11	CERAMIC CHIP	0.1uF		16V
C227	1-164-947-11	CERAMIC CHIP	0.01uF		50V
C229	1-164-947-11	CERAMIC CHIP	0.01uF		50V
C230	1-164-947-11	CERAMIC CHIP	0.01uF		50V
C231	1-164-947-11	CERAMIC CHIP	0.01uF		50V
C232	1-164-947-11	CERAMIC CHIP	0.01uF		50V
C233	1-164-947-11	CERAMIC CHIP	0.01uF		50V
C234	1-164-947-11	CERAMIC CHIP	0.01uF		50V
C235	1-164-947-11	CERAMIC CHIP	0.01uF		50V
C236	1-164-947-11	CERAMIC CHIP	0.01uF		50V
C237	1-164-947-11	CERAMIC CHIP	0.01uF		50V
C238	1-164-947-11	CERAMIC CHIP	0.01uF		50V
C239	1-164-947-11	CERAMIC CHIP	0.01uF		50V
C240	1-164-947-11	CERAMIC CHIP	0.01uF		50V
C241	1-164-947-11	CERAMIC CHIP	0.01uF		50V
C242	1-164-947-11	CERAMIC CHIP	0.01uF		50V
C243	1-164-947-11	CERAMIC CHIP	0.01uF		50V
C244	1-164-947-11	CERAMIC CHIP	0.01uF		50V
C245	1-164-947-11	CERAMIC CHIP	0.01uF		50V
C246	1-164-947-11	CERAMIC CHIP	0.01uF		50V
C247	1-164-947-11	CERAMIC CHIP	0.01uF		50V
C248	1-164-947-11	CERAMIC CHIP	0.01uF		50V
C249	1-164-947-11	CERAMIC CHIP	0.01uF		50V
C250	1-164-947-11	CERAMIC CHIP	0.01uF		50V
C251	1-164-947-11	CERAMIC CHIP	0.01uF		50V
C252	1-164-947-11	CERAMIC CHIP	0.01uF		50V
C253	1-164-947-11	CERAMIC CHIP	0.01uF		50V
C254	1-164-947-11	CERAMIC CHIP	0.01uF		50V
C255	1-117-370-11	CERAMIC CHIP	10uF		10V
C256	1-164-947-11	CERAMIC CHIP	0.01uF		50V
C257	1-164-947-11	CERAMIC CHIP	0.01uF		50V
C258	1-117-370-11	CERAMIC CHIP	10uF		10V
C259	1-164-947-11	CERAMIC CHIP	0.01uF		50V
C260	1-164-947-11	CERAMIC CHIP	0.01uF		50V
C261	1-164-947-11	CERAMIC CHIP	0.01uF		50V
C262	1-164-947-11	CERAMIC CHIP	0.01uF		50V
C263	1-164-947-11	CERAMIC CHIP	0.01uF		50V
C264	1-164-947-11	CERAMIC CHIP	0.01uF		50V
C265	1-117-370-11	CERAMIC CHIP	10uF		10V
C266	1-164-947-11	CERAMIC CHIP	0.01uF		50V
C267	1-164-947-11	CERAMIC CHIP	0.01uF		50V
C268	1-164-947-11	CERAMIC CHIP	0.01uF		50V
C269	1-164-947-11	CERAMIC CHIP	0.01uF		50V
C270	1-164-947-11	CERAMIC CHIP	0.01uF		50V

DMB03

Ref. No.	Part No.	Description			Remarks
C271	1-164-947-11	CERAMIC CHIP	0.01uF		50V
C272	1-164-947-11	CERAMIC CHIP	0.01uF		50V
C275	1-164-947-11	CERAMIC CHIP	0.01uF		50V
C281	1-164-947-11	CERAMIC CHIP	0.01uF		50V
C282	1-164-947-11	CERAMIC CHIP	0.01uF		50V
C283	1-164-947-11	CERAMIC CHIP	0.01uF		50V
C284	1-164-947-11	CERAMIC CHIP	0.01uF		50V
C286	1-164-947-11	CERAMIC CHIP	0.01uF		50V
C287	1-164-947-11	CERAMIC CHIP	0.01uF		50V
C288	1-164-947-11	CERAMIC CHIP	0.01uF		50V
C302	1-164-943-11	CERAMIC CHIP	0.01uF	10.00%	16V
C303	1-164-943-11	CERAMIC CHIP	0.01uF	10.00%	16V
C304	1-164-943-11	CERAMIC CHIP	0.01uF	10.00%	16V
C305	1-164-943-11	CERAMIC CHIP	0.01uF	10.00%	16V
C306	1-164-943-11	CERAMIC CHIP	0.01uF	10.00%	16V
C307	1-164-943-11	CERAMIC CHIP	0.01uF	10.00%	16V
C308	1-164-874-11	CERAMIC CHIP	100PF	5.00%	50V
C309	1-164-874-11	CERAMIC CHIP	100PF	5.00%	50V
C315	1-164-947-11	CERAMIC CHIP	0.01uF		50V
C316	1-164-947-11	CERAMIC CHIP	0.01uF		50V
C321	1-126-206-11	ELECT CHIP	100uF	20%	6.3V
C322	1-107-820-11	CERAMIC CHIP	0.1uF		16V
C323	1-107-820-11	CERAMIC CHIP	0.1uF		16V
C324	1-107-820-11	CERAMIC CHIP	0.1uF		16V
C325	1-126-209-11	ELECT CHIP	100uF	20.00%	4V
C326	1-164-947-11	CERAMIC CHIP	0.01uF		50V
C330	1-107-820-11	CERAMIC CHIP	0.1uF		16V
C352	1-126-206-11	ELECT CHIP	100uF	20%	6.3V
C355	1-126-206-11	ELECT CHIP	100uF	20%	6.3V
C356	1-126-193-11	ELECT	1uF	20%	50V
C357	1-126-193-11	ELECT	1uF	20%	50V
C363	1-107-820-11	CERAMIC CHIP	0.1uF		16V
C364	1-126-206-11	ELECT CHIP	100uF	20%	6.3V
C365	1-107-820-11	CERAMIC CHIP	0.1uF		16V
C366	1-126-206-11	ELECT CHIP	100uF	20%	6.3V
C367	1-164-935-11	CERAMIC CHIP	470PF	10.00%	50V
C368	1-164-935-11	CERAMIC CHIP	470PF	10.00%	50V
C372	1-107-820-11	CERAMIC CHIP	0.1uF		16V
L C374	1-137-987-81	CERAMIC CHIP	0.068uF	10%	10V
C375	1-164-941-11	CERAMIC CHIP	0.0047uF	10.00%	16V
C382	1-107-820-11	CERAMIC CHIP	0.1uF		16V
C383	1-126-209-11	ELECT CHIP	100uF	20.00%	4V
C384	1-107-820-11	CERAMIC CHIP	0.1uF		16V
C385	1-126-209-11	ELECT CHIP	100uF	20.00%	4V
C386	1-164-850-11	CERAMIC CHIP	10PF	0.50PF	50V
C387	1-164-850-11	CERAMIC CHIP	10PF	0.50PF	50V
C392	1-126-395-11	ELECT	22uF	20%	16V
C393	1-164-947-11	CERAMIC CHIP	0.01uF		50V
C394	1-126-246-11	ELECT CHIP	220uF	20%	4V
C412	1-216-864-11	METAL CHIP	0	5%	1/16W
C413	1-216-864-11	METAL CHIP	0	5%	1/16W
C414	1-216-864-11	METAL CHIP	0	5%	1/16W
C415	1-216-864-11	METAL CHIP	0	5%	1/16W
C416	1-216-864-11	METAL CHIP	0	5%	1/16W
C501	1-164-943-11	CERAMIC CHIP	0.01uF	10.00%	16V
C502	1-164-943-11	CERAMIC CHIP	0.01uF	10.00%	16V
C503	1-127-772-81	CERAMIC CHIP	33000PF	10%	10V

Ref. No.	Part No.	Description			Remarks
C504	1-127-772-81	CERAMIC CHIP	33000PF	10%	10V
C506	1-164-934-11	CERAMIC CHIP	330PF	10.00%	50V
C508	1-164-937-11	CERAMIC CHIP	0.001uF	10.00%	50V
C509	1-164-934-11	CERAMIC CHIP	330PF	10.00%	50V
C510	1-164-937-11	CERAMIC CHIP	0.001uF	10.00%	50V
C512	1-164-943-11	CERAMIC CHIP	0.01uF	10.00%	16V
C514	1-164-943-11	CERAMIC CHIP	0.01uF	10.00%	16V
C516	1-164-939-11	CERAMIC CHIP	0.0022uF	10.00%	50V
C517	1-117-370-11	CERAMIC CHIP	10uF		10V
C518	1-164-947-11	CERAMIC CHIP	0.01uF		50V
C519	1-164-943-11	CERAMIC CHIP	0.01uF	10.00%	16V
C522	1-125-777-11	CERAMIC CHIP	0.1uF	10.00%	6.3V
C525	1-164-947-11	CERAMIC CHIP	0.01uF		50V
C526	1-126-395-11	ELECT	22uF	20%	16V
C527	1-164-947-11	CERAMIC CHIP	0.01uF		50V
C528	1-126-395-11	ELECT	22uF	20%	16V
C529	1-164-947-11	CERAMIC CHIP	0.01uF		50V
C531	1-119-923-11	CERAMIC CHIP	0.047uF	10.00%	10V
C533	1-164-939-11	CERAMIC CHIP	0.0022uF	10.00%	50V
C534	1-107-819-11	CERAMIC CHIP	0.022uF	10.00%	16V
C535	1-164-939-11	CERAMIC CHIP	0.0022uF	10.00%	50V
C543	1-107-820-11	CERAMIC CHIP	0.1uF		16V
C544	1-125-777-11	CERAMIC CHIP	0.1uF	10.00%	10V
C545	1-117-370-11	CERAMIC CHIP	10uF		10V
C547	1-107-725-11	CERAMIC CHIP	0.1uF	10.00%	16V
C548	1-164-943-11	CERAMIC CHIP	0.01uF	10.00%	16V
C551	1-125-891-11	CERAMIC CHIP	0.47uF	10.00%	10V
C552	1-216-864-11	METAL CHIP	0	5%	1/16W
C553	1-164-940-11	CERAMIC CHIP	0.0033uF	10.00%	16V
C556	1-117-370-11	CERAMIC CHIP	10uF		10V
C558	1-126-209-11	ELECT CHIP	100uF	20.00%	4V
C559	1-125-777-11	CERAMIC CHIP	0.1uF	10.00%	10V
C560	1-164-938-11	CERAMIC CHIP	0.0015uF	10.00%	50V
C561	1-107-820-11	CERAMIC CHIP	0.1uF		16V
C563	1-164-874-11	CERAMIC CHIP	100PF	5.00%	50V
C565	1-125-777-11	CERAMIC CHIP	0.1uF	10.00%	10V
C567	1-107-820-11	CERAMIC CHIP	0.1uF		16V
C568	1-117-370-11	CERAMIC CHIP	10uF		10V
C569	1-107-820-11	CERAMIC CHIP	0.1uF		16V
C570	1-117-370-11	CERAMIC CHIP	10uF		10V
C573	1-164-874-11	CERAMIC CHIP	100PF	5.00%	50V
C588	1-164-939-11	CERAMIC CHIP	0.0022uF	10.00%	50V
C589	1-164-939-11	CERAMIC CHIP	0.0022uF	10.00%	50V
C590	1-164-939-11	CERAMIC CHIP	0.0022uF	10.00%	50V
C592	1-124-779-00	ELECT CHIP	10uF	20%	16V
C701	1-126-209-11	ELECT CHIP	100uF	20.00%	4V
C702	1-117-370-11	CERAMIC CHIP	10uF		10V
C703	1-125-777-11	CERAMIC CHIP	0.1uF	10.00%	6.3V
C705	1-164-943-11	CERAMIC CHIP	0.01uF	10.00%	16V
C706	1-107-820-11	CERAMIC CHIP	0.1uF		16V
C708	1-164-943-11	CERAMIC CHIP	0.01uF	10.00%	16V
C709	1-107-820-11	CERAMIC CHIP	0.1uF		16V
C711	1-164-943-11	CERAMIC CHIP	0.01uF	10.00%	16V
C712	1-164-874-11	CERAMIC CHIP	100PF	5.00%	50V
C713	1-107-820-11	CERAMIC CHIP	0.1uF		16V
C714	1-107-820-11	CERAMIC CHIP	0.1uF		16V
C715	1-164-938-11	CERAMIC CHIP	0.0015uF	10.00%	50V
C716	1-125-891-11	CERAMIC CHIP	0.47uF	10.00%	10V

DMB03

Ref. No.	Part No.	Description			Remarks
C717	1-164-943-11	CERAMIC CHIP	0.01uF	10.00%	16V
C718	1-107-820-11	CERAMIC CHIP	0.1uF		16V
C720	1-125-777-11	CERAMIC CHIP	0.1uF	10.00%	10V
C721	1-107-820-11	CERAMIC CHIP	0.1uF		16V
C722	1-107-820-11	CERAMIC CHIP	0.1uF		16V
C723	1-107-820-11	CERAMIC CHIP	0.1uF		16V
C724	1-107-820-11	CERAMIC CHIP	0.1uF		16V
C725	1-107-820-11	CERAMIC CHIP	0.1uF		16V
C726	1-107-820-11	CERAMIC CHIP	0.1uF		16V
C727	1-117-370-11	CERAMIC CHIP	10uF		10V
C728	1-125-777-11	CERAMIC CHIP	0.1uF	10.00%	10V
C729	1-117-370-11	CERAMIC CHIP	10uF		10V
C730	1-107-820-11	CERAMIC CHIP	0.1uF		16V
C740	1-107-820-11	CERAMIC CHIP	0.1uF		16V
C741	1-107-820-11	CERAMIC CHIP	0.1uF		16V
C742	1-107-820-11	CERAMIC CHIP	0.1uF		16V
C743	1-107-820-11	CERAMIC CHIP	0.1uF		16V
C744	1-107-820-11	CERAMIC CHIP	0.1uF		16V
C745	1-107-820-11	CERAMIC CHIP	0.1uF		16V
C752	1-107-820-11	CERAMIC CHIP	0.1uF		16V
C760	1-107-820-11	CERAMIC CHIP	0.1uF		16V
C761	1-107-820-11	CERAMIC CHIP	0.1uF		16V
C762	1-107-820-11	CERAMIC CHIP	0.1uF		16V
C763	1-107-820-11	CERAMIC CHIP	0.1uF		16V
C764	1-107-820-11	CERAMIC CHIP	0.1uF		16V
C765	1-107-820-11	CERAMIC CHIP	0.1uF		16V
C766	1-164-874-11	CERAMIC CHIP	100PF	5.00%	50V
C767	1-107-820-11	CERAMIC CHIP	0.1uF		16V
C768	1-107-820-11	CERAMIC CHIP	0.1uF		16V
C769	1-107-820-11	CERAMIC CHIP	0.1uF		16V
C770	1-107-820-11	CERAMIC CHIP	0.1uF		16V
C771	1-119-923-11	CERAMIC CHIP	0.047uF	10.00%	10V
C772	1-107-820-11	CERAMIC CHIP	0.1uF		16V
C773	1-125-891-11	CERAMIC CHIP	0.47uF	10.00%	10V
C774	1-164-941-11	CERAMIC CHIP	0.0047uF	10.00%	16V
C775	1-107-820-11	CERAMIC CHIP	0.1uF		16V
C776	1-107-820-11	CERAMIC CHIP	0.1uF		16V
C777	1-107-820-11	CERAMIC CHIP	0.1uF		16V
C778	1-107-820-11	CERAMIC CHIP	0.1uF		16V
C779	1-117-370-11	CERAMIC CHIP	10uF		10V
C780	1-117-370-11	CERAMIC CHIP	10uF		10V
C781	1-126-209-11	ELECT CHIP	100uF	20.00%	4V
C782	1-164-938-11	CERAMIC CHIP	0.0015uF	10.00%	50V
C783	1-164-938-11	CERAMIC CHIP	0.0015uF	10.00%	50V
C901	1-126-209-11	ELECT CHIP	100uF	20.00%	4V
C902	1-164-947-11	CERAMIC CHIP	0.01uF		50V
C903	1-126-209-11	ELECT CHIP	100uF	20.00%	4V
C904	1-164-947-11	CERAMIC CHIP	0.01uF		50V
C905	1-164-947-11	CERAMIC CHIP	0.01uF		50V
C906	1-164-947-11	CERAMIC CHIP	0.01uF		50V
C907	1-164-947-11	CERAMIC CHIP	0.01uF		50V
C908	1-164-874-11	CERAMIC CHIP	100PF	5.00%	50V
C909	1-164-874-11	CERAMIC CHIP	100PF	5.00%	50V
C910	1-164-947-11	CERAMIC CHIP	0.01uF		50V
C913	1-127-772-81	CERAMIC CHIP	33000PF	10%	10V
C914	1-164-849-11	CERAMIC CHIP	9PF	0.50PF	50V
C915	1-164-849-11	CERAMIC CHIP	9PF	0.50PF	50V
C916	1-126-209-11	ELECT CHIP	100uF	20.00%	4V
C917	1-164-947-11	CERAMIC CHIP	0.01uF		50V
C918	1-164-947-11	CERAMIC CHIP	0.01uF		50V
C924	1-164-947-11	CERAMIC CHIP	0.01uF		50V
C925	1-126-395-11	ELECT	22uF	20%	16V
C926	1-126-246-11	ELECT CHIP	220uF	20%	4V
C927	1-164-947-11	CERAMIC CHIP	0.01uF		50V
C1302	1-125-777-11	CERAMIC CHIP	0.1uF	10%	10V
C1304	1-125-777-11	CERAMIC CHIP	0.1uF	10%	10V
		< CONNECTOR >			
CN101	1-784-365-21	CONNECTOR, FFC/FPC 5P			
CN102	1-815-954-21	PIN, CONNECTOR (PC BOARD) 13P			
CN103	1-784-368-11	CONNECTOR, FFC/FPC 9P			
CN105	1-784-370-21	CONNECTOR, FFC/FPC 11P			
CN107	1-784-382-21	CONNECTOR, FFC/FPC 25P			
CN202	1-784-364-21	CONNECTOR, FFC/FPC 4P			
CN501	1-778-957-11	CONNECTOR, FFC/FPC 29P			
* CN901	1-764-177-11	PIN, CONNECTOR (SMD)(1.5mm) 7P			
		< DIODE >			
D202	8-719-988-61	DIODE 1SS355TE-17			
D392	8-719-988-61	DIODE 1SS355TE-17			
D393	8-719-988-61	DIODE 1SS355TE-17			
D394	8-719-988-61	DIODE 1SS355TE-17			
D901	8-719-988-61	DIODE 1SS355TE-17			
D1101	8-719-988-61	DIODE 1SS355TE-17			
D1102	8-719-988-61	DIODE 1SS355TE-17			
D1201	8-719-988-61	DIODE 1SS355TE-17			
D1202	8-719-988-61	DIODE 1SS355TE-17			
D1203	8-719-988-61	DIODE 1SS355TE-17			
D1204	8-719-988-61	DIODE 1SS355TE-17			
D1301	8-719-988-61	DIODE 1SS355TE-17			
D1302	8-719-988-61	DIODE 1SS355TE-17			
D1303	8-719-988-61	DIODE 1SS355TE-17			
D1304	8-719-988-61	DIODE 1SS355TE-17			
D1305	8-719-988-61	DIODE 1SS355TE-17			
D1306	8-719-988-61	DIODE 1SS355TE-17			
D1307	8-719-988-61	DIODE 1SS355TE-17			
D1308	8-719-988-61	DIODE 1SS355TE-17			
D1801	8-719-988-61	DIODE 1SS355TE-17			
D1802	8-719-988-61	DIODE 1SS355TE-17			
D1803	8-719-988-61	DIODE 1SS355TE-17			
D1804	8-719-988-61	DIODE 1SS355TE-17			
D1805	8-719-988-61	DIODE 1SS355TE-17			
D1806	8-719-988-61	DIODE 1SS355TE-17			
		< FERRITE BEAD >			
FB901	1-500-284-21	FERRITE	0uH		
FB902	1-500-284-21	FERRITE	0uH		
FB903	1-500-284-21	FERRITE	0uH		
		< FILTER >			
FL203	1-234-177-21	FERRITE	0uH		
FL204	1-234-177-21	FERRITE	0uH		
FL205	1-234-177-21	FERRITE	0uH		
FL206	1-234-177-21	FERRITE	0uH		
FL302	1-234-177-21	FERRITE	0uH		

DMB03

Ref. No.	Part No.	Description				Remarks
FL303	1-234-177-21	FERRITE	0uH			
FL352	1-234-177-21	FERRITE	0uH			
FL372	1-234-177-21	FERRITE	0uH			
FL501	1-234-177-21	FERRITE	0uH			
FL502	1-234-177-21	FERRITE	0uH			
FL701	1-234-177-21	FERRITE	0uH			
FL702	1-234-177-21	FERRITE	0uH			
FL703	1-234-177-21	FERRITE	0uH			
FL704	1-234-177-21	FERRITE	0uH			
FL705	1-234-177-21	FERRITE	0uH			
FL706	1-234-177-21	FERRITE	0uH			
FL901	1-234-177-21	FERRITE	0uH			
FL903	1-234-177-21	FERRITE	0uH			
FL908	1-234-177-21	FERRITE	0uH			
		< IC >				
IC203	6-704-069-01	IC MT48LC4M32B2TG-6				
IC204	8-759-668-01	IC BR9040F-D-E2				
IC206	6-701-770-01	IC MBM29DL640E-90TN				
IC207	6-703-540-01	IC ZIVA5X-C1F				
IC211	6-700-398-01	IC uPC2918T-E1				
IC216	6-700-437-01	IC SN74ALVCH16841DGGR				
IC255	8-759-058-54	IC TC7S00FU(TE85R)				
IC256	8-759-549-21	IC SN74LV573APWR				
IC258	8-759-549-21	IC SN74LV573APWR				
IC259	8-759-549-21	IC SN74LV573APWR				
IC302	6-703-787-01	IC PCM1609KPTR				
IC333	8-759-677-29	IC TC74LVX125FT(EL)				
IC352	8-759-560-56	IC PCM1800E/2K				
IC372	6-703-373-01	IC LC89052T-TLM-E				
IC392	8-759-583-47	IC uPC2933T-E2				
IC501	6-702-157-01	IC FAN8035L				
IC503	8-759-058-43	IC NJM3404AV(TE2)				
IC509	8-752-408-73	IC CXD3068Q				
IC701	6-703-552-01	IC TMC57929PGF-RDP				
IC703	8-759-058-43	IC NJM3404AV(TE2)				
IC706	8-759-564-30	IC MSM51V18165F-60TSKR1				
IC901	8-752-933-58	IC CXP973F064R-1				
IC902	8-759-058-64	IC TC7S32FU-TE85L				
IC903	8-759-641-86	IC BR24C16F-E2				
IC904	6-702-563-01	IC TC7W74FK-TE85L				
IC906	6-700-407-01	IC SM8707GV-G-E2				
IC907	8-759-583-47	IC uPC2933T-E2				
		< JUMPER RESISTOR >				
JW392	1-216-864-11	METAL CHIP	0	5%		1/16W
JW601	1-218-990-11	SHORT CHIP	0			
JW602	1-218-990-11	SHORT CHIP	0			
JW603	1-218-990-11	SHORT CHIP	0			
JW604	1-218-990-11	SHORT CHIP	0			
JW605	1-218-990-11	SHORT CHIP	0			
JW606	1-218-990-11	SHORT CHIP	0			
JW607	1-218-990-11	SHORT CHIP	0			
JW801	1-218-990-11	SHORT CHIP	0			
JW802	1-218-990-11	SHORT CHIP	0			
JW803	1-218-990-11	SHORT CHIP	0			
JW804	1-218-990-11	SHORT CHIP	0			
JW805	1-218-990-11	SHORT CHIP	0			
JW806	1-218-990-11	SHORT CHIP	0			
		< COIL >				
L402	1-216-296-11	SHORT CHIP	0			
L403	1-216-296-11	SHORT CHIP	0			
L404	1-216-296-11	SHORT CHIP	0			
L405	1-216-296-11	SHORT CHIP	0			
L406	1-216-296-11	SHORT CHIP	0			
L412	1-216-296-11	SHORT CHIP	0			
L413	1-216-296-11	SHORT CHIP	0			
L414	1-216-296-11	SHORT CHIP	0			
L415	1-216-296-11	SHORT CHIP	0			
L416	1-216-296-11	SHORT CHIP	0			
L901	1-412-031-11	INDUCTOR CHIP	47uH			
		< TRANSISTOR >				
Q202	8-729-929-26	TRANSISTOR	DTC114TE-TL			
Q901	8-729-929-26	TRANSISTOR	DTC114TE-TL			
Q903	8-729-025-28	TRANSISTOR	2SK1828TE85L			
Q904	8-729-025-28	TRANSISTOR	2SK1828TE85L			
		< RESISTOR >				
R10	1-216-801-11	METAL CHIP	22	5%		1/16W
R11	1-216-801-11	METAL CHIP	22	5%		1/16W
R12	1-216-801-11	METAL CHIP	22	5%		1/16W
R13	1-216-801-11	METAL CHIP	22	5%		1/16W
R14	1-216-801-11	METAL CHIP	22	5%		1/16W
R15	1-216-801-11	METAL CHIP	22	5%		1/16W
R18	1-216-801-11	METAL CHIP	22	5%		1/16W
R20	1-216-801-11	METAL CHIP	22	5%		1/16W
R21	1-216-803-11	METAL CHIP	33	5%		1/16W
R22	1-216-805-11	METAL CHIP	47	5%		1/16W
R201	1-216-833-11	METAL CHIP	10K	5%		1/16W
R207	1-216-864-11	METAL CHIP	0	5%		1/16W
R213	1-216-807-11	METAL CHIP	68	5%		1/16W
R214	1-216-864-11	METAL CHIP	0	5%		1/16W
R215	1-216-864-11	METAL CHIP	0	5%		1/16W
R217	1-216-864-11	METAL CHIP	0	5%		1/16W
R218	1-216-864-11	METAL CHIP	0	5%		1/16W
R219	1-216-864-11	METAL CHIP	0	5%		1/16W
R220	1-216-864-11	METAL CHIP	0	5%		1/16W
R221	1-216-864-11	METAL CHIP	0	5%		1/16W
R222	1-216-864-11	METAL CHIP	0	5%		1/16W
R223	1-216-864-11	METAL CHIP	0	5%		1/16W
R224	1-216-864-11	METAL CHIP	0	5%		1/16W
R225	1-216-864-11	METAL CHIP	0	5%		1/16W
R226	1-216-864-11	METAL CHIP	0	5%		1/16W
R227	1-216-829-11	METAL CHIP	4.7K	5%		1/16W
R228	1-216-864-11	METAL CHIP	0	5%		1/16W
R230	1-216-803-11	METAL CHIP	33	5%		1/16W
R231	1-216-803-11	METAL CHIP	33	5%		1/16W
R232	1-216-803-11	METAL CHIP	33	5%		1/16W
R233	1-216-864-11	METAL CHIP	0	5%		1/16W
R234	1-216-833-11	METAL CHIP	10K	5%		1/16W
R240	1-216-841-11	METAL CHIP	47K	5%		1/16W
R241	1-216-864-11	METAL CHIP	0	5%		1/16W
R243	1-216-864-11	METAL CHIP	0	5%		1/16W

DMB03

Ref. No.	Part No.	Description			Remarks
R244	1-216-821-11	METAL CHIP	1K	5%	1/16W
R245	1-216-829-11	METAL CHIP	4.7K	5%	1/16W
R246	1-216-833-11	METAL CHIP	10K	5%	1/16W
R247	1-216-821-11	METAL CHIP	1K	5%	1/16W
R248	1-216-829-11	METAL CHIP	4.7K	5%	1/16W
R250	1-216-864-11	METAL CHIP	0	5%	1/16W
R251	1-216-864-11	METAL CHIP	0	5%	1/16W
R252	1-216-833-11	METAL CHIP	10K	5%	1/16W
R253	1-216-829-11	METAL CHIP	4.7K	5%	1/16W
R254	1-216-829-11	METAL CHIP	4.7K	5%	1/16W
R255	1-216-864-11	METAL CHIP	0	5%	1/16W
R257	1-216-829-11	METAL CHIP	4.7K	5%	1/16W
R259	1-216-829-11	METAL CHIP	4.7K	5%	1/16W
R260	1-216-829-11	METAL CHIP	4.7K	5%	1/16W
R261	1-216-829-11	METAL CHIP	4.7K	5%	1/16W
R262	1-216-864-11	METAL CHIP	0	5%	1/16W
R263	1-218-285-11	METAL CHIP	75	5%	1/10W
R264	1-218-285-11	METAL CHIP	75	5%	1/10W
R265	1-218-285-11	METAL CHIP	75	5%	1/10W
R266	1-218-285-11	METAL CHIP	75	5%	1/10W
R267	1-218-285-11	METAL CHIP	75	5%	1/10W
R268	1-216-864-11	METAL CHIP	0	5%	1/16W
R269	1-216-864-11	METAL CHIP	0	5%	1/16W
R270	1-216-864-11	METAL CHIP	0	5%	1/16W
R273	1-216-864-11	METAL CHIP	0	5%	1/16W
R274	1-216-864-11	METAL CHIP	0	5%	1/16W
R275	1-216-864-11	METAL CHIP	0	5%	1/16W
R276	1-216-864-11	METAL CHIP	0	5%	1/16W
R277	1-216-864-11	METAL CHIP	0	5%	1/16W
R278	1-218-285-11	METAL CHIP	75	5%	1/10W
R279	1-218-285-11	METAL CHIP	75	5%	1/10W
R280	1-218-285-11	METAL CHIP	75	5%	1/10W
R281	1-218-285-11	METAL CHIP	75	5%	1/10W
R282	1-218-285-11	METAL CHIP	75	5%	1/10W
R283	1-218-847-11	METAL CHIP	1K	0.5%	1/10W
R284	1-218-829-11	METAL CHIP	180	0.5%	1/10W
R291	1-216-864-11	METAL CHIP	0	5%	1/16W
R292	1-216-864-11	METAL CHIP	0	5%	1/16W
R293	1-216-864-11	METAL CHIP	0	5%	1/16W
R294	1-216-864-11	METAL CHIP	0	5%	1/16W
R295	1-216-864-11	METAL CHIP	0	5%	1/16W
R296	1-216-864-11	METAL CHIP	0	5%	1/16W
R302	1-216-813-11	METAL CHIP	220	5%	1/16W
R303	1-216-813-11	METAL CHIP	220	5%	1/16W
R304	1-216-813-11	METAL CHIP	220	5%	1/16W
R305	1-216-813-11	METAL CHIP	220	5%	1/16W
R306	1-216-813-11	METAL CHIP	220	5%	1/16W
R307	1-216-813-11	METAL CHIP	220	5%	1/16W
R308	1-216-813-11	METAL CHIP	220	5%	1/16W
R309	1-216-813-11	METAL CHIP	220	5%	1/16W
R310	1-216-809-11	METAL CHIP	100	5%	1/16W
R311	1-216-809-11	METAL CHIP	100	5%	1/16W
R312	1-216-809-11	METAL CHIP	100	5%	1/16W
R313	1-216-833-11	METAL CHIP	10K	5%	1/16W
R314	1-216-801-11	METAL CHIP	22	5%	1/16W
R315	1-216-864-11	METAL CHIP	0	5%	1/16W
R327	1-216-864-11	METAL CHIP	0	5%	1/16W
R328	1-216-864-11	METAL CHIP	0	5%	1/16W
R329	1-216-864-11	METAL CHIP	0	5%	1/16W
R330	1-216-864-11	METAL CHIP	0	5%	1/16W
R335	1-216-864-11	METAL CHIP	0	5%	1/16W
R352	1-216-864-11	METAL CHIP	0	5%	1/16W
R353	1-216-864-11	METAL CHIP	0	5%	1/16W
R362	1-216-833-11	METAL CHIP	10K	5%	1/16W
R372	1-216-809-11	METAL CHIP	100	5%	1/16W
R373	1-216-809-11	METAL CHIP	100	5%	1/16W
R374	1-216-809-11	METAL CHIP	100	5%	1/16W
R375	1-216-809-11	METAL CHIP	100	5%	1/16W
R376	1-216-809-11	METAL CHIP	100	5%	1/16W
R377	1-216-809-11	METAL CHIP	100	5%	1/16W
R378	1-216-809-11	METAL CHIP	100	5%	1/16W
R379	1-216-809-11	METAL CHIP	100	5%	1/16W
R380	1-216-809-11	METAL CHIP	100	5%	1/16W
R381	1-216-833-11	METAL CHIP	10K	5%	1/16W
R382	1-216-833-11	METAL CHIP	10K	5%	1/16W
R383	1-216-833-11	METAL CHIP	10K	5%	1/16W
R384	1-216-833-11	METAL CHIP	10K	5%	1/16W
R385	1-216-811-11	METAL CHIP	150	5%	1/16W
R387	1-216-864-11	METAL CHIP	0	5%	1/16W
R388	1-216-857-11	METAL CHIP	1M	5%	1/16W
R389	1-216-815-11	METAL CHIP	330	5%	1/16W
R392	1-216-797-11	METAL CHIP	10	5%	1/16W
R501	1-216-864-11	METAL CHIP	0	5%	1/16W
R502	1-216-864-11	METAL CHIP	0	5%	1/16W
R503	1-216-841-11	METAL CHIP	47K	5%	1/16W
R504	1-216-841-11	METAL CHIP	47K	5%	1/16W
R505	1-216-841-11	METAL CHIP	47K	5%	1/16W
R506	1-216-841-11	METAL CHIP	47K	5%	1/16W
R507	1-216-864-11	METAL CHIP	0	5%	1/16W
R508	1-216-864-11	METAL CHIP	0	5%	1/16W
R510	1-216-847-11	METAL CHIP	150K	5%	1/16W
R511	1-216-847-11	METAL CHIP	150K	5%	1/16W
R512	1-216-842-11	METAL CHIP	56K	5%	1/16W
R513	1-216-842-11	METAL CHIP	56K	5%	1/16W
R516	1-216-829-11	METAL CHIP	4.7K	5%	1/16W
R517	1-216-825-11	METAL CHIP	2.2K	5%	1/16W
R519	1-216-845-11	METAL CHIP	100K	5%	1/16W
R520	1-216-833-11	METAL CHIP	10K	5%	1/16W
R521	1-216-845-11	METAL CHIP	100K	5%	1/16W
R522	1-216-829-11	METAL CHIP	4.7K	5%	1/16W
R523	1-216-833-11	METAL CHIP	10K	5%	1/16W
R524	1-216-833-11	METAL CHIP	10K	5%	1/16W
R525	1-216-833-11	METAL CHIP	10K	5%	1/16W
R527	1-216-825-11	METAL CHIP	2.2K	5%	1/16W
R528	1-216-864-11	METAL CHIP	0	5%	1/16W
R529	1-216-839-11	METAL CHIP	33K	5%	1/16W
R530	1-216-842-11	METAL CHIP	56K	5%	1/16W
R531	1-216-864-11	METAL CHIP	0	5%	1/16W
R532	1-216-864-11	METAL CHIP	0	5%	1/16W
R533	1-216-839-11	METAL CHIP	33K	5%	1/16W
R534	1-216-842-11	METAL CHIP	56K	5%	1/16W
R535	1-216-864-11	METAL CHIP	0	5%	1/16W
R536	1-216-833-11	METAL CHIP	10K	5%	1/16W
R537	1-216-843-11	METAL CHIP	68K	5%	1/16W
R538	1-216-864-11	METAL CHIP	0	5%	1/16W

DMB03

Ref. No.	Part No.	Description			Remarks
R539	1-216-864-11	METAL CHIP	0	5%	1/16W
R540	1-216-864-11	METAL CHIP	0	5%	1/16W
R541	1-216-864-11	METAL CHIP	0	5%	1/16W
R543	1-216-864-11	METAL CHIP	0	5%	1/16W
R544	1-216-864-11	METAL CHIP	0	5%	1/16W
R545	1-216-833-11	METAL CHIP	10K	5%	1/16W
R547	1-216-864-11	METAL CHIP	0	5%	1/16W
R548	1-216-833-11	METAL CHIP	10K	5%	1/16W
R550	1-216-821-11	METAL CHIP	1K	5%	1/16W
R551	1-216-821-11	METAL CHIP	1K	5%	1/16W
R552	1-216-821-11	METAL CHIP	1K	5%	1/16W
R553	1-216-864-11	METAL CHIP	0	5%	1/16W
R554	1-216-864-11	METAL CHIP	0	5%	1/16W
R555	1-216-864-11	METAL CHIP	0	5%	1/16W
R558	1-216-841-11	METAL CHIP	47K	5%	1/16W
R559	1-216-821-11	METAL CHIP	1K	5%	1/16W
R560	1-216-821-11	METAL CHIP	1K	5%	1/16W
R561	1-216-821-11	METAL CHIP	1K	5%	1/16W
R562	1-216-821-11	METAL CHIP	1K	5%	1/16W
R563	1-216-821-11	METAL CHIP	1K	5%	1/16W
R564	1-216-821-11	METAL CHIP	1K	5%	1/16W
R565	1-216-821-11	METAL CHIP	1K	5%	1/16W
R566	1-216-833-11	METAL CHIP	10K	5%	1/16W
R567	1-216-827-11	METAL CHIP	3.3K	5%	1/16W
R568	1-216-857-11	METAL CHIP	1M	5%	1/16W
R569	1-216-864-11	METAL CHIP	0	5%	1/16W
R571	1-216-857-11	METAL CHIP	1M	5%	1/16W
R572	1-216-853-11	METAL CHIP	470K	5%	1/16W
R573	1-216-833-11	METAL CHIP	10K	5%	1/16W
R575	1-216-864-11	METAL CHIP	0	5%	1/16W
R576	1-216-864-11	METAL CHIP	0	5%	1/16W
R577	1-216-864-11	METAL CHIP	0	5%	1/16W
R578	1-216-864-11	METAL CHIP	0	5%	1/16W
R579	1-216-832-11	METAL CHIP	8.2K	5%	1/16W
R580	1-216-839-11	METAL CHIP	33K	5%	1/16W
R581	1-216-834-11	METAL CHIP	12K	5%	1/16W
R583	1-216-864-11	METAL CHIP	0	5%	1/16W
R584	1-216-839-11	METAL CHIP	33K	5%	1/16W
R585	1-216-864-11	METAL CHIP	0	5%	1/16W
R586	1-218-747-11	METAL CHIP	200K	5%	1/10W
R587	1-216-864-11	METAL CHIP	0	5%	1/16W
R588	1-216-833-11	METAL CHIP	10K	5%	1/16W
R589	1-216-833-11	METAL CHIP	10K	5%	1/16W
R592	1-216-864-11	METAL CHIP	0	5%	1/16W
R593	1-216-845-11	METAL CHIP	100K	5%	1/16W
R597	1-216-864-11	METAL CHIP	0	5%	1/16W
R599	1-216-821-11	METAL CHIP	1K	5%	1/16W
R601	1-216-864-11	METAL CHIP	0	5%	1/16W
R615	1-216-864-11	METAL CHIP	0	5%	1/16W
R629	1-216-864-11	METAL CHIP	0	5%	1/16W
R694	1-216-833-11	METAL CHIP	10K	5%	1/16W
R695	1-216-864-11	METAL CHIP	0	5%	1/16W
R696	1-216-864-11	METAL CHIP	0	5%	1/16W
R698	1-216-864-11	METAL CHIP	0	5%	1/16W
R699	1-216-864-11	METAL CHIP	0	5%	1/16W
R700	1-216-832-11	METAL CHIP	8.2K	5%	1/16W
R707	1-216-809-11	METAL CHIP	100	5%	1/16W
R708	1-216-853-11	METAL CHIP	470K	5%	1/16W
R709	1-216-847-11	METAL CHIP	150K	5%	1/16W
R710	1-216-833-11	METAL CHIP	10K	5%	1/16W
R711	1-216-825-11	METAL CHIP	2.2K	5%	1/16W
R712	1-216-833-11	METAL CHIP	10K	5%	1/16W
R713	1-216-833-11	METAL CHIP	10K	5%	1/16W
R714	1-216-833-11	METAL CHIP	10K	5%	1/16W
R715	1-216-833-11	METAL CHIP	10K	5%	1/16W
R716	1-216-809-11	METAL CHIP	100	5%	1/16W
R717	1-216-845-11	METAL CHIP	100K	5%	1/16W
R718	1-216-833-11	METAL CHIP	10K	5%	1/16W
R719	1-216-821-11	METAL CHIP	1K	5%	1/16W
R720	1-216-821-11	METAL CHIP	1K	5%	1/16W
R721	1-216-839-11	METAL CHIP	33K	5%	1/16W
R724	1-216-821-11	METAL CHIP	1K	5%	1/16W
R725	1-216-824-11	METAL CHIP	1.8K	5%	1/16W
R726	1-216-845-11	METAL CHIP	100K	5%	1/16W
R727	1-216-827-11	METAL CHIP	3.3K	5%	1/16W
R728	1-216-833-11	METAL CHIP	10K	5%	1/16W
R730	1-216-801-11	METAL CHIP	22	5%	1/16W
R731	1-216-801-11	METAL CHIP	22	5%	1/16W
R732	1-216-833-11	METAL CHIP	10K	5%	1/16W
R733	1-216-833-11	METAL CHIP	10K	5%	1/16W
R734	1-216-833-11	METAL CHIP	10K	5%	1/16W
R735	1-216-833-11	METAL CHIP	10K	5%	1/16W
R736	1-216-833-11	METAL CHIP	10K	5%	1/16W
R737	1-216-833-11	METAL CHIP	10K	5%	1/16W
R738	1-216-833-11	METAL CHIP	10K	5%	1/16W
R741	1-216-801-11	METAL CHIP	22	5%	1/16W
R742	1-216-801-11	METAL CHIP	22	5%	1/16W
R743	1-216-801-11	METAL CHIP	22	5%	1/16W
R744	1-216-801-11	METAL CHIP	22	5%	1/16W
R745	1-216-841-11	METAL CHIP	47K	5%	1/16W
R746	1-216-841-11	METAL CHIP	47K	5%	1/16W
R747	1-216-839-11	METAL CHIP	33K	5%	1/16W
R748	1-216-839-11	METAL CHIP	33K	5%	1/16W
R750	1-216-833-11	METAL CHIP	10K	5%	1/16W
R751	1-216-864-11	METAL CHIP	0	5%	1/16W
R752	1-216-864-11	METAL CHIP	0	5%	1/16W
R753	1-216-864-11	METAL CHIP	0	5%	1/16W
R754	1-216-864-11	METAL CHIP	0	5%	1/16W
R755	1-216-864-11	METAL CHIP	0	5%	1/16W
R756	1-216-864-11	METAL CHIP	0	5%	1/16W
R757	1-216-864-11	METAL CHIP	0	5%	1/16W
R758	1-216-864-11	METAL CHIP	0	5%	1/16W
R759	1-216-864-11	METAL CHIP	0	5%	1/16W
R762	1-216-837-11	METAL CHIP	22K	5%	1/16W
R763	1-216-832-11	METAL CHIP	8.2K	5%	1/16W
R764	1-216-857-11	METAL CHIP	1M	5%	1/16W
R765	1-216-837-11	METAL CHIP	22K	5%	1/16W
R766	1-216-864-11	METAL CHIP	0	5%	1/16W
R767	1-216-841-11	METAL CHIP	47K	5%	1/16W
R769	1-216-825-11	METAL CHIP	2.2K	5%	1/16W
R770	1-216-864-11	METAL CHIP	0	5%	1/16W
R776	1-216-864-11	METAL CHIP	0	5%	1/16W
R777	1-216-864-11	METAL CHIP	0	5%	1/16W
R778	1-216-845-11	METAL CHIP	100K	5%	1/16W
R780	1-216-864-11	METAL CHIP	0	5%	1/16W

DMB03

Ref. No.	Part No.	Description			Remarks
R781	1-216-864-11	METAL CHIP	0	5%	1/16W
R784	1-216-864-11	METAL CHIP	0	5%	1/16W
R785	1-216-833-11	METAL CHIP	10K	5%	1/16W
R786	1-216-845-11	METAL CHIP	100K	5%	1/16W
R787	1-216-845-11	METAL CHIP	100K	5%	1/16W
R788	1-216-845-11	METAL CHIP	100K	5%	1/16W
R789	1-216-845-11	METAL CHIP	100K	5%	1/16W
R799	1-216-864-11	METAL CHIP	0	5%	1/16W
R805	1-216-864-11	METAL CHIP	0	5%	1/16W
R901	1-216-801-11	METAL CHIP	22	5%	1/16W
R902	1-216-801-11	METAL CHIP	22	5%	1/16W
R903	1-216-801-11	METAL CHIP	22	5%	1/16W
R904	1-216-833-11	METAL CHIP	10K	5%	1/16W
R905	1-216-801-11	METAL CHIP	22	5%	1/16W
R906	1-216-801-11	METAL CHIP	22	5%	1/16W
R907	1-216-801-11	METAL CHIP	22	5%	1/16W
R908	1-216-833-11	METAL CHIP	10K	5%	1/16W
R910	1-216-864-11	METAL CHIP	0	5%	1/16W
R911	1-216-833-11	METAL CHIP	10K	5%	1/16W
R912	1-216-833-11	METAL CHIP	10K	5%	1/16W
R913	1-216-833-11	METAL CHIP	10K	5%	1/16W
R915	1-216-809-11	METAL CHIP	100	5%	1/16W
R916	1-216-821-11	METAL CHIP	1K	5%	1/16W
R917	1-216-821-11	METAL CHIP	1K	5%	1/16W
R918	1-216-801-11	METAL CHIP	22	5%	1/16W
R919	1-216-864-11	METAL CHIP	0	5%	1/16W
R920	1-216-809-11	METAL CHIP	100	5%	1/16W
R921	1-216-809-11	METAL CHIP	100	5%	1/16W
R922	1-216-801-11	METAL CHIP	22	5%	1/16W
R923	1-216-813-11	METAL CHIP	220	5%	1/16W
R925	1-216-809-11	METAL CHIP	100	5%	1/16W
R926	1-216-809-11	METAL CHIP	100	5%	1/16W
R927	1-216-857-11	METAL CHIP	1M	5%	1/16W
R928	1-216-809-11	METAL CHIP	100	5%	1/16W
R929	1-216-809-11	METAL CHIP	100	5%	1/16W
R930	1-216-809-11	METAL CHIP	100	5%	1/16W
R931	1-216-801-11	METAL CHIP	22	5%	1/16W
R932	1-216-801-11	METAL CHIP	22	5%	1/16W
R933	1-216-801-11	METAL CHIP	22	5%	1/16W
R934	1-216-801-11	METAL CHIP	22	5%	1/16W
R935	1-216-829-11	METAL CHIP	4.7K	5%	1/16W
R940	1-216-809-11	METAL CHIP	100	5%	1/16W
R942	1-216-809-11	METAL CHIP	100	5%	1/16W
R943	1-216-809-11	METAL CHIP	100	5%	1/16W
R947	1-216-864-11	METAL CHIP	0	5%	1/16W
R948	1-216-864-11	METAL CHIP	0	5%	1/16W
R949	1-216-864-11	METAL CHIP	0	5%	1/16W
R958	1-216-801-11	METAL CHIP	22	5%	1/16W
R962	1-216-833-11	METAL CHIP	10K	5%	1/16W
R964	1-216-833-11	METAL CHIP	10K	5%	1/16W
R970	1-216-864-11	METAL CHIP	0	5%	1/16W
R971	1-216-864-11	METAL CHIP	0	5%	1/16W
R973	1-216-864-11	METAL CHIP	0	5%	1/16W
R974	1-216-864-11	METAL CHIP	0	5%	1/16W
R975	1-216-833-11	METAL CHIP	10K	5%	1/16W
R976	1-216-864-11	METAL CHIP	0	5%	1/16W
R978	1-216-833-11	METAL CHIP	10K	5%	1/16W
R984	1-216-833-11	METAL CHIP	10K	5%	1/16W
R988	1-216-864-11	METAL CHIP	0	5%	1/16W
R990	1-216-864-11	METAL CHIP	0	5%	1/16W
R991	1-216-864-11	METAL CHIP	0	5%	1/16W
R992	1-216-864-11	METAL CHIP	0	5%	1/16W
R994	1-216-864-11	METAL CHIP	0	5%	1/16W
R995	1-216-864-11	METAL CHIP	0	5%	1/16W
R996	1-216-864-11	METAL CHIP	0	5%	1/16W
R997	1-216-864-11	METAL CHIP	0	5%	1/16W
R998	1-216-864-11	METAL CHIP	0	5%	1/16W
R1000	1-216-829-11	METAL CHIP	4.7K	5%	1/16W
R1101	1-164-156-11	CERAMIC CHIP	0.1uF		25V
R1201	1-164-156-11	CERAMIC CHIP	0.1uF		25V
R1202	1-164-156-11	CERAMIC CHIP	0.1uF		25V
R1301	1-164-156-11	CERAMIC CHIP	0.1uF		25V
R1302	1-164-156-11	CERAMIC CHIP	0.1uF		25V
R1303	1-164-156-11	CERAMIC CHIP	0.1uF		25V
R1304	1-164-156-11	CERAMIC CHIP	0.1uF		25V
R1801	1-164-156-11	CERAMIC CHIP	0.1uF		25V
R1802	1-164-156-11	CERAMIC CHIP	0.1uF		25V
R1803	1-164-156-11	CERAMIC CHIP	0.1uF		25V
R9980	1-216-864-11	METAL CHIP	0	5%	1/16W
R9981	1-216-864-11	METAL CHIP	0	5%	1/16W
R9982	1-216-864-11	METAL CHIP	0	5%	1/16W
R9983	1-216-864-11	METAL CHIP	0	5%	1/16W
R9984	1-216-864-11	METAL CHIP	0	5%	1/16W
R9985	1-216-864-11	METAL CHIP	0	5%	1/16W
R9986	1-216-864-11	METAL CHIP	0	5%	1/16W
R9987	1-216-864-11	METAL CHIP	0	5%	1/16W
R9988	1-216-864-11	METAL CHIP	0	5%	1/16W
R9993	1-216-864-11	METAL CHIP	0	5%	1/16W
R9994	1-216-864-11	METAL CHIP	0	5%	1/16W
R9998	1-216-864-11	METAL CHIP	0	5%	1/16W
R9999	1-216-864-11	METAL CHIP	0	5%	1/16W
		< COMPOSITION CIRCUIT BLOCK >			
RB10	1-233-388-11	RES, NETWORK 68 (3216)			
RB11	1-233-388-11	RES, NETWORK 68 (3216)			
RB12	1-233-388-11	RES, NETWORK 68 (3216)			
RB13	1-233-388-11	RES, NETWORK 68 (3216)			
RB14	1-233-388-11	RES, NETWORK 68 (3216)			
RB15	1-233-388-11	RES, NETWORK 68 (3216)			
RB16	1-233-388-11	RES, NETWORK 68 (3216)			
RB17	1-233-388-11	RES, NETWORK 68 (3216)			
RB18	1-234-524-21	RES, CHIP NETWORK 33			
RB19	1-234-524-21	RES, CHIP NETWORK 33			
RB20	1-234-524-21	RES, CHIP NETWORK 33			
RB21	1-234-524-21	RES, CHIP NETWORK 33			
		< VIBRATOR >			
X372	1-795-126-21	VIBRATOR, CRYSTAL 12.288MHz			
X901	1-781-945-21	VIBRATOR, CERAMIC 20MHz			
X902	1-795-630-11	VIBRATOR, CRYSTAL 27MHz			

****

HP I/O

Ref. No.	Part No.	Description			Remarks
	1-686-960-11	HP BOARD			
		*********			
		< CAPACITOR >			
C148	1-162-927-11	CERAMIC CHIP	100PF	5%	50V
		< CONNECTOR >			
CNP100	1-691-766-11	PLUG (MICRO CONNECTOR) 4P			
		< JACK >			
J100	1-815-314-21	JACK (PHONES)			
**********					
	A-4732-145-A	I/O BOARD, COMPLETE			
		**********			
	7-685-646-79	SCREW +BVTP 3X8 TYPE2 IT-3			
		< CAPACITOR >			
C1310	1-126-960-11	ELECT	1uF	20.00%	50V
C1313	1-164-156-11	CERAMIC CHIP	0.1uF		25V
C1314	1-126-964-11	ELECT	10uF	20.00%	50V
C1316	1-126-960-11	ELECT	1uF	20.00%	50V
C1317	1-126-933-11	ELECT	100uF	20.00%	16V
C1318	1-126-933-11	ELECT	100uF	20.00%	16V
C1319	1-126-933-11	ELECT	100uF	20.00%	16V
C1320	1-126-933-11	ELECT	100uF	20.00%	16V
C1321	1-126-933-11	ELECT	100uF	20.00%	16V
C1322	1-126-933-11	ELECT	100uF	20.00%	16V
C1323	1-164-156-11	CERAMIC CHIP	0.1uF		25V
C1324	1-126-964-11	ELECT	10uF	20.00%	50V
C1325	1-126-960-11	ELECT	1uF	20.00%	50V
C1326	1-126-960-11	ELECT	1uF	20.00%	50V
C1327	1-126-960-11	ELECT	1uF	20.00%	50V
C1328	1-126-933-11	ELECT	100uF	20.00%	16V
C1331	1-126-947-11	ELECT	47uF	20.00%	25V
C1337	1-126-964-11	ELECT	10uF	20.00%	50V
C1338	1-126-964-11	ELECT	10uF	20.00%	50V
C1339	1-162-927-11	CERAMIC CHIP	100PF	5%	50V
C1340	1-162-927-11	CERAMIC CHIP	100PF	5%	50V
C1341	1-162-927-11	CERAMIC CHIP	100PF	5%	50V
C1342	1-162-927-11	CERAMIC CHIP	100PF	5%	50V
C1346	1-126-964-11	ELECT	10uF	20.00%	50V
C1347	1-162-960-11	CERAMIC CHIP	220PF	10%	50V
C1348	1-136-165-00	FILM	0.1uF	5.00%	50V
C1349	1-136-165-00	FILM	0.1uF	5.00%	50V
C1352	1-126-964-11	ELECT	10uF	20.00%	50V
C1353	1-126-964-11	ELECT	10uF	20.00%	50V
C1354	1-126-964-11	ELECT	10uF	20.00%	50V
C1355	1-126-964-11	ELECT	10uF	20.00%	50V
C1356	1-126-947-11	ELECT	47uF	20.00%	25V
C1357	1-126-947-11	ELECT	47uF	20.00%	25V
C1358	1-126-964-11	ELECT	10uF	20.00%	50V
C1359	1-126-964-11	ELECT	10uF	20.00%	50V
C1360	1-126-964-11	ELECT	10uF	20.00%	50V
C1361	1-126-964-11	ELECT	10uF	20.00%	50V
C1362	1-126-964-11	ELECT	10uF	20.00%	50V
C1363	1-126-964-11	ELECT	10uF	20.00%	50V
C1364	1-126-964-11	ELECT	10uF	20.00%	50V
C1365	1-126-964-11	ELECT	10uF	20.00%	50V
C1366	1-162-927-11	CERAMIC CHIP	100PF	5%	50V
C1367	1-162-927-11	CERAMIC CHIP	100PF	5%	50V
C1370	1-162-927-11	CERAMIC CHIP	100PF	5%	50V
C1371	1-162-927-11	CERAMIC CHIP	100PF	5%	50V
C1372	1-162-979-11	CERAMIC CHIP	0.0027uF	10.00%	50V
C1373	1-164-156-11	CERAMIC CHIP	0.1uF		25V
C1374	1-164-156-11	CERAMIC CHIP	0.1uF		25V
C1375	1-164-227-11	CERAMIC CHIP	0.022uF	10%	25V
C1376	1-164-227-11	CERAMIC CHIP	0.022uF	10%	25V
C1379	1-164-227-11	CERAMIC CHIP	0.022uF	10%	25V
C1380	1-164-227-11	CERAMIC CHIP	0.022uF	10%	25V
C1382	1-164-227-11	CERAMIC CHIP	0.022uF	10%	25V
C1385	1-162-979-11	CERAMIC CHIP	0.0027uF	10.00%	50V
C1386	1-162-979-11	CERAMIC CHIP	0.0027uF	10.00%	50V
C1387	1-162-979-11	CERAMIC CHIP	0.0027uF	10.00%	50V
C1388	1-162-958-11	CERAMIC CHIP	270PF	5%	50V
C1389	1-162-958-11	CERAMIC CHIP	270PF	5%	50V
C1390	1-162-958-11	CERAMIC CHIP	270PF	5%	50V
C1391	1-162-958-11	CERAMIC CHIP	270PF	5%	50V
C1394	1-162-958-11	CERAMIC CHIP	270PF	5%	50V
C1395	1-162-958-11	CERAMIC CHIP	270PF	5%	50V
C1396	1-126-947-11	ELECT	47uF	20.00%	25V
C1397	1-126-947-11	ELECT	47uF	20.00%	25V
C1398	1-126-947-11	ELECT	47uF	20.00%	25V
C1399	1-126-947-11	ELECT	47uF	20.00%	25V
C1400	1-126-947-11	ELECT	47uF	20.00%	25V
C1401	1-126-947-11	ELECT	47uF	20.00%	25V
C1402	1-126-947-11	ELECT	47uF	20.00%	25V
C1403	1-126-947-11	ELECT	47uF	20.00%	25V
C1406	1-164-156-11	CERAMIC CHIP	0.1uF		25V
C1408	1-164-156-11	CERAMIC CHIP	0.1uF		25V
C1409	1-164-156-11	CERAMIC CHIP	0.1uF		25V
C1410	1-164-156-11	CERAMIC CHIP	0.1uF		25V
C1411	1-126-964-11	ELECT	10uF	20.00%	50V
C1412	1-126-964-11	ELECT	10uF	20.00%	50V
C1413	1-162-927-11	CERAMIC CHIP	100PF	5%	50V
C1414	1-162-927-11	CERAMIC CHIP	100PF	5%	50V
C1415	1-164-156-11	CERAMIC CHIP	0.1uF		25V
C1417	1-162-979-11	CERAMIC CHIP	0.0027uF	10.00%	50V
C1418	1-162-979-11	CERAMIC CHIP	0.0027uF	10.00%	50V
C1420	1-164-156-11	CERAMIC CHIP	0.1uF		25V
C1421	1-164-156-11	CERAMIC CHIP	0.1uF		25V
C1422	1-164-156-11	CERAMIC CHIP	0.1uF		25V
C1423	1-126-964-11	ELECT	10uF	20.00%	50V
C1424	1-126-964-11	ELECT	10uF	20.00%	50V
C1425	1-126-964-11	ELECT	10uF	20.00%	50V
C1426	1-126-964-11	ELECT	10uF	20.00%	50V
C1427	1-126-964-11	ELECT	10uF	20.00%	50V
C1428	1-126-964-11	ELECT	10uF	20.00%	50V
C1432	1-164-156-11	CERAMIC CHIP	0.1uF		25V
C1433	1-126-964-11	ELECT	10uF	20.00%	50V
C1434	1-164-227-11	CERAMIC CHIP	0.022uF	10%	25V
C1435	1-164-227-11	CERAMIC CHIP	0.022uF	10%	25V
C1441	1-126-947-11	ELECT	47uF	20.00%	25V
C1442	1-164-156-11	CERAMIC CHIP	0.1uF		25V

I/O

Ref. No.	Part No.	Description			Remarks
C1450	1-126-933-11	ELECT	100uF	20.00%	16V
C1451	1-126-933-11	ELECT	100uF	20.00%	16V
C1811	1-164-156-11	CERAMIC CHIP	0.1uF		25V
C1812	1-164-156-11	CERAMIC CHIP	0.1uF		25V
C1813	1-126-947-11	ELECT	47uF	20.00%	25V
C1814	1-126-947-11	ELECT	47uF	20.00%	25V
C1850	1-164-156-11	CERAMIC CHIP	0.1uF		25V
C1853	1-126-947-11	ELECT	47uF	20.00%	25V
		< CONNECTOR >			
CNP3	1-784-926-11	PIN, CONNECTOR 11P			
CNS301	1-568-440-11	SOCKET, CONNECTOR 17P			
CNS303	1-785-374-11	CONNECTOR,FFC(LIF(NON-ZIF))11P			
CNS304	1-569-060-11	SOCKET, CONNECTOR 11P			
CNS305	1-779-293-11	CONNECTOR,FFC(LIF(NON-ZIF))25P			
		< DIODE >			
D1919	8-719-988-61	DIODE 1SS355TE-17			
		< FERRITE BEAD >			
FB1300	1-414-813-21	FERRITE	0uH		
FB1301	1-414-813-21	FERRITE	0uH		
FB1302	1-414-813-21	FERRITE	0uH		
FB1400	1-216-864-91	CONDUCTOR, CHIP		0	
FB1401	1-216-864-91	CONDUCTOR, CHIP		0	
FB1402	1-216-864-91	CONDUCTOR, CHIP		0	
FB1403	1-414-813-21	FERRITE	0uH		
FB1404	1-216-864-91	CONDUCTOR, CHIP		0	
FB1405	1-414-813-21	FERRITE	0uH		
FB1406	1-414-813-21	FERRITE	0uH		
FB1407	1-414-813-21	FERRITE	0uH		
FB1408	1-414-813-21	FERRITE	0uH		
		< IC >			
IC1301	6-702-335-01	IC MM1568			
IC1302	8-759-256-44	IC NJM2235M-TE2			
IC1303	6-703-518-01	IC BD3842FS-FD2			
IC1304	8-759-548-63	IC SN74LV125ANSR			
IC1307	8-759-710-97	IC NJM4565M(TE2)			
IC1309	8-759-710-97	IC NJM4565M(TE2)			
IC1310	8-759-710-97	IC NJM4565M(TE2)			
IC1311	8-759-710-97	IC NJM4565M(TE2)			
IC1312	6-703-499-01	IC BD3813KS-F			
IC1313	8-759-710-97	IC NJM4565M(TE2)			
IC1811	8-759-649-68	IC uPC78M07AHF			
IC1812	8-759-604-95	IC M5F79M07L			
IC1813	8-759-039-69	IC uPC7805AHF			
		< JACK >			
J301	1-815-360-11	JACK, PIN 3P (COMPONENT VIDEO OUT)			
J302	1-695-317-11	JACK, PIN 2P (VIDEO IN/VIDEO OUT)			
J304	1-794-981-11	JACK, PIN 4P (AUDIO IN/TV)			
		< JUMPER RESISTOR >			
JR5	1-216-864-11	METAL CHIP	0	5%	1/16W
JR6	1-216-864-11	METAL CHIP	0	5%	1/16W
JR8	1-216-864-11	METAL CHIP	0	5%	1/16W
JR14	1-216-864-11	METAL CHIP	0	5%	1/16W
JR15	1-216-864-11	METAL CHIP	0	5%	1/16W
JR16	1-216-864-11	METAL CHIP	0	5%	1/16W
JR17	1-216-864-11	METAL CHIP	0	5%	1/16W
		< TRANSISTOR >			
Q1300	8-729-823-22	TRANSISTOR	2SC3576-AC		
		< RESISTOR >			
R1216	1-216-841-11	METAL CHIP	47K	5%	1/16W
R1217	1-216-841-11	METAL CHIP	47K	5%	1/16W
R1218	1-216-841-11	METAL CHIP	47K	5%	1/16W
R1219	1-216-841-11	METAL CHIP	47K	5%	1/16W
R1310	1-218-285-11	METAL CHIP	75	5%	1/10W
R1312	1-218-285-11	METAL CHIP	75	5%	1/10W
R1313	1-216-833-11	METAL CHIP	10K	5%	1/16W
R1314	1-218-285-11	METAL CHIP	75	5%	1/10W
R1315	1-218-285-11	METAL CHIP	75	5%	1/10W
R1316	1-218-285-11	METAL CHIP	75	5%	1/10W
R1330	1-216-821-11	METAL CHIP	1K	5%	1/16W
R1331	1-216-821-11	METAL CHIP	1K	5%	1/16W
R1334	1-216-821-11	METAL CHIP	1K	5%	1/16W
R1335	1-216-821-11	METAL CHIP	1K	5%	1/16W
R1339	1-216-845-11	METAL CHIP	100K	5%	1/16W
R1342	1-216-849-11	METAL CHIP	220K	5%	1/16W
R1343	1-216-853-11	METAL CHIP	470K	5%	1/16W
R1344	1-216-845-11	METAL CHIP	100K	5%	1/16W
R1345	1-216-833-11	METAL CHIP	10K	5%	1/16W
R1346	1-216-837-11	METAL CHIP	22K	5%	1/16W
R1349	1-216-841-11	METAL CHIP	47K	5%	1/16W
R1350	1-216-841-11	METAL CHIP	47K	5%	1/16W
R1351	1-216-841-11	METAL CHIP	47K	5%	1/16W
R1352	1-216-841-11	METAL CHIP	47K	5%	1/16W
R1353	1-216-841-11	METAL CHIP	47K	5%	1/16W
R1354	1-216-841-11	METAL CHIP	47K	5%	1/16W
R1357	1-216-845-11	METAL CHIP	100K	5%	1/16W
R1358	1-216-845-11	METAL CHIP	100K	5%	1/16W
R1359	1-216-837-11	METAL CHIP	22K	5%	1/16W
R1360	1-216-837-11	METAL CHIP	22K	5%	1/16W
R1361	1-216-845-11	METAL CHIP	100K	5%	1/16W
R1362	1-216-845-11	METAL CHIP	100K	5%	1/16W
R1363	1-216-821-11	METAL CHIP	1K	5%	1/16W
R1364	1-216-835-11	METAL CHIP	15K	5%	1/16W
R1365	1-216-821-11	METAL CHIP	1K	5%	1/16W
R1366	1-216-835-11	METAL CHIP	15K	5%	1/16W
R1367	1-216-821-11	METAL CHIP	1K	5%	1/16W
R1368	1-216-835-11	METAL CHIP	15K	5%	1/16W
R1369	1-216-821-11	METAL CHIP	1K	5%	1/16W
R1370	1-216-835-11	METAL CHIP	15K	5%	1/16W
R1371	1-216-821-11	METAL CHIP	1K	5%	1/16W
R1372	1-216-835-11	METAL CHIP	15K	5%	1/16W
R1373	1-216-835-11	METAL CHIP	15K	5%	1/16W
R1374	1-216-821-11	METAL CHIP	1K	5%	1/16W
R1378	1-216-809-11	METAL CHIP	100	5%	1/16W
R1379	1-216-809-11	METAL CHIP	100	5%	1/16W
R1380	1-216-821-11	METAL CHIP	1K	5%	1/16W
R1381	1-216-821-11	METAL CHIP	1K	5%	1/16W
R1382	1-216-821-11	METAL CHIP	1K	5%	1/16W

Ref. No.	Part No.	Description			Remarks
R1383	1-216-821-11	METAL CHIP	1K	5%	1/16W
R1386	1-216-821-11	METAL CHIP	1K	5%	1/16W
R1387	1-216-821-11	METAL CHIP	1K	5%	1/16W
R1388	1-216-821-11	METAL CHIP	1K	5%	1/16W
R1389	1-216-821-11	METAL CHIP	1K	5%	1/16W
R1390	1-216-821-11	METAL CHIP	1K	5%	1/16W
R1391	1-216-821-11	METAL CHIP	1K	5%	1/16W
R1394	1-216-809-11	METAL CHIP	100	5%	1/16W
R1395	1-216-809-11	METAL CHIP	100	5%	1/16W
R1396	1-216-818-11	METAL CHIP	560	5%	1/16W
R1397	1-216-825-11	METAL CHIP	2.2K	5%	1/16W
R1398	1-216-833-11	METAL CHIP	10K	5%	1/16W
R1399	1-216-813-91	CONDUCTOR, CHIP		0	
R1401	1-216-832-11	METAL CHIP	8.2K	5%	1/16W
R1402	1-216-832-11	METAL CHIP	8.2K	5%	1/16W
R1403	1-216-832-11	METAL CHIP	8.2K	5%	1/16W
R1404	1-216-832-11	METAL CHIP	8.2K	5%	1/16W
R1405	1-216-832-11	METAL CHIP	8.2K	5%	1/16W
R1406	1-216-832-11	METAL CHIP	8.2K	5%	1/16W

****

	A-4732-139-A	MAIN BOARD, COMPLETE (US,CND)			
		**********			
	A-4733-270-A	MAIN BOARD, COMPLETE (AEP,UK)			
		**********			
	A-4733-271-A	MAIN BOARD, COMPLETE (MX)			
		**********			
	A-4747-690-A	MAIN BOARD, COMPLETE (E51)			
		**********			
	7-685-646-79	SCREW +BVTP 3X8 TYPE2 IT-3			
		< CAPACITOR >			
C411	1-126-964-11	ELECT	10uF	20.00%	50V
C412	1-128-809-11	CERAMIC	100PF	5%	50V
C413	1-128-809-11	CERAMIC	100PF	5%	50V
C414	1-102-233-00	CERAMIC	33PF	10.00%	500V
C415	1-107-583-11	CERAMIC	3PF	0.25PF	500V
C416	1-126-933-11	ELECT	100uF	20.00%	16V
C417	1-126-965-91	ELECT	22uF	20.00%	50V
C421	1-126-947-11	ELECT	47uF	20.00%	25V
C423	1-107-597-11	CERAMIC	22PF	10.00%	500V
C424	1-107-597-11	CERAMIC	22PF	10.00%	500V
C425	1-128-813-11	CERAMIC	220PF	5%	50V
C431	1-136-157-00	FILM	0.022uF	5.00%	50V
C440	1-128-809-11	CERAMIC	100PF	5%	50V
C443	1-127-880-11	CERAMIC	0.022uF	10%	50V
C461	1-126-964-11	ELECT	10uF	20.00%	50V
C462	1-128-809-11	CERAMIC	100PF	5%	50V
C463	1-128-809-11	CERAMIC	100PF	5%	50V
C464	1-102-233-00	CERAMIC	33PF	10.00%	500V
C465	1-107-583-11	CERAMIC	3PF	0.25PF	500V
C466	1-126-933-11	ELECT	100uF	20.00%	16V
C471	1-126-947-11	ELECT	47uF	20.00%	25V
C473	1-107-597-11	CERAMIC	22PF	10.00%	500V
C474	1-107-597-11	CERAMIC	22PF	10.00%	500V
C475	1-128-813-11	CERAMIC	220PF	5%	50V
C476	1-127-876-11	CERAMIC	0.01uF	10%	50V
C477	1-126-964-11	ELECT	10uF	20.00%	50V

Ref. No.	Part No.	Description			Remarks
C481	1-136-157-00	FILM	0.022uF	5.00%	50V
C490	1-128-809-11	CERAMIC	100PF	5%	50V
C493	1-127-880-11	CERAMIC	0.022uF	10%	50V
C511	1-126-964-11	ELECT	10uF	20.00%	50V
C512	1-128-809-11	CERAMIC	100PF	5%	50V
C513	1-128-809-11	CERAMIC	100PF	5%	50V
C514	1-102-233-00	CERAMIC	33PF	10.00%	500V
C515	1-107-583-11	CERAMIC	3PF	0.25PF	500V
C516	1-126-933-11	ELECT	100uF	20.00%	16V
C517	1-126-965-91	ELECT	22uF	20.00%	50V
C521	1-126-947-11	ELECT	47uF	20.00%	25V
C523	1-107-597-11	CERAMIC	22PF	10.00%	500V
C524	1-107-597-11	CERAMIC	22PF	10.00%	500V
C525	1-128-813-11	CERAMIC	220PF	5%	50V
C526	1-164-159-11	CERAMIC	0.1uF		50V
C527	1-126-964-11	ELECT	10uF	20.00%	50V
C528	1-136-157-00	FILM	0.022uF	5.00%	50V
C540	1-128-809-11	CERAMIC	100PF	5%	50V
C543	1-127-880-11	CERAMIC	0.022uF	10%	50V
C561	1-126-964-11	ELECT	10uF	20.00%	50V
C562	1-128-809-11	CERAMIC	100PF	5%	50V
C563	1-128-809-11	CERAMIC	100PF	5%	50V
C564	1-102-233-00	CERAMIC	33PF	10.00%	500V
C565	1-107-583-11	CERAMIC	3PF	0.25PF	500V
C566	1-126-933-11	ELECT	100uF	20.00%	16V
C571	1-126-947-11	ELECT	47uF	20.00%	25V
C573	1-107-597-11	CERAMIC	22PF	10.00%	500V
C575	1-107-597-11	CERAMIC	22PF	10.00%	500V
C576	1-164-159-11	CERAMIC	0.1uF		50V
C577	1-126-964-11	ELECT	10uF	20.00%	50V
C578	1-128-813-11	CERAMIC	220PF	5%	50V
C587	1-136-157-00	FILM	0.022uF	5.00%	50V
C590	1-128-809-11	CERAMIC	100PF	5%	50V
C593	1-127-880-11	CERAMIC	0.022uF	10%	50V
C611	1-126-964-11	ELECT	10uF	20.00%	50V
C612	1-128-809-11	CERAMIC	100PF	5%	50V
C613	1-128-809-11	CERAMIC	100PF	5%	50V
C614	1-102-233-00	CERAMIC	33PF	10.00%	500V
C615	1-107-583-11	CERAMIC	3PF	0.25PF	500V
C616	1-126-933-11	ELECT	100uF	20.00%	16V
C617	1-126-965-91	ELECT	22uF	20.00%	50V
C621	1-126-947-11	ELECT	47uF	20.00%	25V
C623	1-107-597-11	CERAMIC	22PF	10.00%	500V
C624	1-107-597-11	CERAMIC	22PF	10.00%	500V
C625	1-128-813-11	CERAMIC	220PF	5%	50V
C626	1-127-876-11	CERAMIC	0.01uF	10%	50V
C627	1-126-964-11	ELECT	10uF	20.00%	50V
C631	1-136-157-00	FILM	0.022uF	5.00%	50V
C640	1-128-809-11	CERAMIC	100PF	5%	50V
C643	1-127-880-11	CERAMIC	0.022uF	10%	50V
C661	1-126-964-11	ELECT	10uF	20.00%	50V
C662	1-128-809-11	CERAMIC	100PF	5%	50V
C663	1-128-809-11	CERAMIC	100PF	5%	50V
C664	1-102-233-00	CERAMIC	33PF	10.00%	500V
C665	1-107-583-11	CERAMIC	3PF	0.25PF	500V
C666	1-126-933-11	ELECT	100uF	20.00%	16V
C671	1-126-947-11	ELECT	47uF	20.00%	25V
C673	1-107-597-11	CERAMIC	22PF	10.00%	500V

MAIN

Ref. No.	Part No.	Description			Remarks
C674	1-107-597-11	CERAMIC	22PF	10.00%	500V
C675	1-128-813-11	CERAMIC	220PF	5%	50V
C676	1-127-876-11	CERAMIC	0.01uF	10%	50V
C677	1-126-964-11	ELECT	10uF	20.00%	50V
C681	1-136-157-00	FILM	0.022uF	5.00%	50V
C690	1-128-809-11	CERAMIC	100PF	5%	50V
C693	1-127-880-11	CERAMIC	0.022uF	10%	50V
C731	1-128-809-11	CERAMIC	100PF	5%	50V
C741	1-128-582-11	ELECT	10uF	20.00%	100V
C742	1-128-582-11	ELECT	10uF	20.00%	100V
C751	1-126-934-11	ELECT	220uF	20.00%	10V
C752	1-126-964-11	ELECT	10uF	20.00%	50V
C801	1-135-851-21	MYLAR	0.22uF		100V
C802	1-135-851-21	MYLAR	0.22uF		100V
C803	1-165-946-11	ELECT	6800uF	20%	71V
C804	1-165-946-11	ELECT	6800uF	20%	71V
C805	1-126-947-11	ELECT	47uF	20.00%	35V
C806	1-126-947-11	ELECT	47uF	20.00%	35V
C807	1-126-947-11	ELECT	47uF	20.00%	35V
C808	1-117-251-51	ELECT	3300uF	20.00%	6.3V
C809	1-126-935-11	ELECT	470uF	20.00%	16V
C810	1-164-159-11	CERAMIC	0.1uF		50V
C811	1-107-935-11	ELECT	330uF	20.00%	100V
C815	1-126-942-61	ELECT	1000uF	20.00%	25V
C816	1-126-942-61	ELECT	1000uF	20.00%	25V
C817	1-164-159-11	CERAMIC	0.1uF		50V
C818	1-164-159-11	CERAMIC	0.1uF		50V
C819	1-164-159-11	CERAMIC	0.1uF		50V
C820	1-126-936-11	ELECT	3300uF	20.00%	16V
C824	1-164-159-11	CERAMIC	0.1uF		50V
C825	1-126-947-11	ELECT	47uF	20.00%	25V
C826	1-164-159-11	CERAMIC	0.1uF		50V
C827	1-126-964-11	ELECT	10uF	20.00%	50V
C828	1-126-947-11	ELECT	47uF	20.00%	25V
C829	1-126-947-11	ELECT	47uF	20.00%	25V
C830	1-164-159-11	CERAMIC	0.1uF		50V
C831	1-127-876-11	CERAMIC	0.01uF	10%	50V
C832	1-164-159-11	CERAMIC	0.1uF		50V
C833	1-126-947-11	ELECT	47uF	20.00%	25V
C834	1-164-159-11	CERAMIC	0.1uF		50V
C835	1-126-942-61	ELECT	1000uF	20.00%	25V
C836	1-126-943-11	ELECT	2200uF	20.00%	25V
C837	1-126-941-11	ELECT	470uF	20.00%	25V
C838	1-127-876-11	CERAMIC	0.01uF	10%	50V
C839	1-164-159-11	CERAMIC	0.1uF		50V
C840	1-164-159-11	CERAMIC	0.1uF		50V
C841	1-126-947-11	ELECT	47uF	20.00%	25V
C851	1-126-933-11	ELECT	100uF	20.00%	16V
C856	1-126-947-11	ELECT	47uF	20.00%	25V
C857	1-164-159-11	CERAMIC	0.1uF		50V
C871	1-124-259-91	ELECT	4.7uF	20.00%	50V
C873	1-124-255-91	ELECT	1uF	20.00%	50V
C874	1-124-259-91	ELECT	4.7uF	20.00%	50V
C875	1-124-255-91	ELECT	1uF	20.00%	50V
⚠C902	1-104-705-11	MYLAR	0.1uF	20.00%	250V
⚠C903	1-104-705-11	MYLAR	0.1uF	20.00%	250V
C904	1-127-880-11	CERAMIC	0.022uF	10%	50V
C905	1-164-159-11	CERAMIC	0.1uF		50V
C906	1-164-159-11	CERAMIC	0.1uF		50V
C907	1-126-160-11	ELECT	1uF	20%	50V
C908	1-126-964-11	ELECT	10uF	20.00%	50V
C909	1-126-957-11	ELECT	0.22uF	20.00%	50V
C910	1-104-905-11	CAPACITOR	0.22F		5.5V
C918	1-126-163-11	ELECT	4.7uF	20%	50V
C919	1-164-159-11	CERAMIC	0.1uF		50V
C920	1-164-159-11	CERAMIC	0.1uF		50V
C921	1-164-159-11	CERAMIC	0.1uF		50V
C939	1-164-159-11	CERAMIC	0.1uF		50V
C945	1-164-159-11	CERAMIC	0.1uF		50V
C950	1-126-936-11	ELECT	3300uF	20.00%	16V
C951	1-164-159-11	CERAMIC	0.1uF		50V
C952	1-164-159-11	CERAMIC	0.1uF		50V
C953	1-164-159-11	CERAMIC	0.1uF		50V
C954	1-164-159-11	CERAMIC	0.1uF		50V
C956	1-164-159-11	CERAMIC	0.1uF		50V
C961	1-164-159-11	CERAMIC	0.1uF		50V
C962	1-164-159-11	CERAMIC	0.1uF		50V
C963	1-164-159-11	CERAMIC	0.1uF		50V
C964	1-127-876-11	CERAMIC	0.01uF	10%	50V
C965	1-127-876-11	CERAMIC	0.01uF	10%	50V

< CONNECTOR >

* CN804	1-564-104-00	PIN, CONNECTOR(3.96mm PITCH)3P
* CN906	1-568-938-11	PIN, CONNECTOR 11P

< CONNECTOR >

CNP801	1-779-978-11	PIN, CONNECTOR 3P
CNP901	1-564-321-00	PIN, CONNECTOR(3.96mm PITCH)2P
* CNP902	1-565-792-11	PIN, CONNECTOR(3.96mm PITCH)2P
CNP903	1-691-768-11	PLUG (MICRO CONNECTOR) 6P
CNP904	1-779-495-11	PLUG, CONNECTOR PIN 4P (E51)
CNP905	1-564-506-11	PLUG, CONNECTOR 3P
CNS901	1-569-325-11	SOCKET, CONNECTOR 25P
CNS904	1-568-440-11	SOCKET, CONNECTOR 17P
CNS905	1-779-273-11	CONNECTOR, FFC(LIF(NON-ZIF))5P

< DIODE >

D426	8-719-991-33	DIODE 1SS133T-72
D448	8-719-991-33	DIODE 1SS133T-72
D449	8-719-991-33	DIODE 1SS133T-72
D475	8-719-991-33	DIODE 1SS133T-72
D476	8-719-991-33	DIODE 1SS133T-72
D481	8-719-991-33	DIODE 1SS133T-72
D525	8-719-991-33	DIODE 1SS133T-72
D526	8-719-991-33	DIODE 1SS133T-72
D527	8-719-991-33	DIODE 1SS133T-72
D528	8-719-991-33	DIODE 1SS133T-72
D575	8-719-991-33	DIODE 1SS133T-72
D576	8-719-991-33	DIODE 1SS133T-72
D577	8-719-991-33	DIODE 1SS133T-72
D581	8-719-991-33	DIODE 1SS133T-72
D625	8-719-991-33	DIODE 1SS133T-72

The components identified by mark ⚠ or dotted line with mark ⚠ are critical for safety. Replace only with part number specified.	Les composants identifiés par une marque ⚠ sont critiques pour la sécurité. Ne les remplacer que par une pièce portant le numéro spécifié.

MAIN

Ref. No.	Part No.	Description	Remarks
D626	8-719-991-33	DIODE 1SS133T-72	
D627	8-719-991-33	DIODE 1SS133T-72	
D675	8-719-991-33	DIODE 1SS133T-72	
D676	8-719-991-33	DIODE 1SS133T-72	
D681	8-719-991-33	DIODE 1SS133T-72	
D735	8-719-934-17	DIODE HZS27-1LTA	
D736	8-719-991-33	DIODE 1SS133T-72	
D751	8-719-991-33	DIODE 1SS133T-72	
D752	8-719-991-33	DIODE 1SS133T-72	
D753	8-719-991-33	DIODE 1SS133T-72	
D801	8-719-072-05	DIODE RBV-602LF-A	
D802	8-719-043-53	DIODE D2SBA20F03	
D804	8-719-068-28	DIODE HZ6.8BP-TK	
D805	8-719-934-21	DIODE HZS30-1LTA	
D807	8-719-080-53	DIODE RK36LF-B3	
D809	8-719-028-23	DIODE D3SBA20-4101	
D830	8-719-947-12	DIODE MTZJ-T-72-4.7A	
D831	8-719-947-12	DIODE MTZJ-T-72-4.7A	
D851	8-719-024-99	DIODE 11ES2-NTA2B	
D852	8-719-024-99	DIODE 11ES2-NTA2B	
D853	8-719-024-99	DIODE 11ES2-NTA2B	
D854	8-719-024-99	DIODE 11ES2-NTA2B	
D870	8-719-991-34	DIODE 1SS133T-72	
D881	8-719-991-33	DIODE 1SS133T-72	
D901	8-719-991-33	DIODE 1SS133T-72	
D902	8-719-991-33	DIODE 1SS133T-72	
D910	8-719-024-99	DIODE 11ES2-NTA2B	
D911	8-719-024-99	DIODE 11ES2-NTA2B	
D912	8-719-024-99	DIODE 11ES2-NTA2B	
D913	8-719-024-99	DIODE 11ES2-NTA2B	
D914	8-719-991-33	DIODE 1SS133T-72	
D915	8-719-991-33	DIODE 1SS133T-72	
D917	8-719-024-99	DIODE 11ES2-NTA2B	
D921	8-719-024-99	DIODE 11ES2-NTA2B	
D922	6-500-522-11	DIODE 10EDB40-TA2B5	
		< FUSE HOLDER >	
FH901	1-533-293-11	FUSE HOLDER	
FH951	1-533-293-11	FUSE HOLDER	
		< EARTH TERMINAL >	
* G901	1-537-738-21	TERMINAL, EARTH	
* G902	1-537-738-21	TERMINAL, EARTH	
* G903	1-537-738-21	TERMINAL, EARTH	
* G904	1-537-738-21	TERMINAL, EARTH	
		< IC >	
IC400	6-700-943-01	IC uPC2581V-S	
IC500	6-700-943-01	IC uPC2581V-S	
IC600	6-700-943-01	IC uPC2581V-S	
IC730	8-759-636-74	IC NJM4565DD	
IC803	8-759-039-69	IC uPC7805AHF	
IC804	8-759-518-68	IC PQ12RF21	
IC806	8-759-656-35	IC NJM7810FA	
IC809	8-759-039-69	IC uPC7805AHF	
IC830	8-759-598-69	IC BA6956AN	
IC831	8-759-598-69	IC BA6956AN	
IC901	6-802-651-01	IC uPD703033BYGF-M15-3BA	
IC905	8-759-333-83	IC NJM2103D	
IC906	6-700-813-01	IC SI-8033JF	
		< COIL >	
L440	1-420-872-52	COIL, AIR-CORE	
L490	1-420-872-52	COIL, AIR-CORE	
L540	1-420-872-52	COIL, AIR-CORE	
L590	1-420-872-52	COIL, AIR-CORE	
L640	1-420-872-52	COIL, AIR-CORE	
L690	1-420-872-52	COIL, AIR-CORE	
L801	1-419-253-11	INDUCTOR 100uH	
L903	1-410-509-11	INDUCTOR 10uH	
		< LINE FILTER >	
⚠ LF901	1-424-930-11	COIL, LINE FILTER	
		< TRANSISTOR >	
Q421	8-729-119-76	TRANSISTOR 2SA1115TP-EF	
Q422	8-729-141-30	TRANSISTOR 2SC3623ATP-LK	
Q425	8-729-140-82	TRANSISTOR 2SA988TP-PAFAEA	
Q426	8-729-140-82	TRANSISTOR 2SA988TP-PAFAEA	
Q441	8-729-823-22	TRANSISTOR 2SC3576-AC	
Q451	8-729-119-79	TRANSISTOR 2SC2785TP-FEK	
Q471	8-729-119-76	TRANSISTOR 2SA1115TP-EF	
Q472	8-729-141-30	TRANSISTOR 2SC3623ATP-LK	
Q475	8-729-140-82	TRANSISTOR 2SA988TP-PAFAEA	
Q476	8-729-140-82	TRANSISTOR 2SA988TP-PAFAEA	
Q477	8-729-281-53	TRANSISTOR 2SC1815GR-TPE2	
Q491	8-729-823-22	TRANSISTOR 2SC3576-AC	
Q521	8-729-119-76	TRANSISTOR 2SA1115TP-EF	
Q522	8-729-141-30	TRANSISTOR 2SC3623ATP-LK	
Q525	8-729-140-82	TRANSISTOR 2SA988TP-PAFAEA	
Q526	8-729-140-82	TRANSISTOR 2SA988TP-PAFAEA	
Q527	8-729-281-53	TRANSISTOR 2SC1815GR-TPE2	
Q541	8-729-823-22	TRANSISTOR 2SC3576-AC	
Q551	8-729-119-79	TRANSISTOR 2SC2785TP-FEK	
Q571	8-729-119-76	TRANSISTOR 2SA1115TP-EF	
Q572	8-729-141-30	TRANSISTOR 2SC3623ATP-LK	
Q575	8-729-140-82	TRANSISTOR 2SA988TP-PAFAEA	
Q576	8-729-140-82	TRANSISTOR 2SA988TP-PAFAEA	
Q577	8-729-281-53	TRANSISTOR 2SC1815GR-TPE2	
Q591	8-729-823-22	TRANSISTOR 2SC3576-AC	
Q621	8-729-119-76	TRANSISTOR 2SA1115TP-EF	
Q622	8-729-141-30	TRANSISTOR 2SC3623ATP-LK	
Q625	8-729-140-82	TRANSISTOR 2SA988TP-PAFAEA	
Q626	8-729-140-82	TRANSISTOR 2SA988TP-PAFAEA	
Q627	8-729-281-53	TRANSISTOR 2SC1815GR-TPE2	
Q641	8-729-823-22	TRANSISTOR 2SC3576-AC	
Q651	8-729-119-79	TRANSISTOR 2SC2785TP-FEK	
Q671	8-729-119-76	TRANSISTOR 2SA1115TP-EF	
Q672	8-729-141-30	TRANSISTOR 2SC3623ATP-LK	
Q675	8-729-140-82	TRANSISTOR 2SA988TP-PAFAEA	
Q676	8-729-140-82	TRANSISTOR 2SA988TP-PAFAEA	
Q677	8-729-281-53	TRANSISTOR 2SC1815GR-TPE2	
Q691	8-729-823-22	TRANSISTOR 2SC3576-AC	

The components identified by mark ⚠ or dotted line with mark ⚠ are critical for safety. Replace only with part number specified.	Les composants identifiés par une marque ⚠ sont critiques pour la sécurité. Ne les remplacer que par une pièce portant le numéro spécifié.

MAIN

Ref. No.	Part No.	Description				Remarks
Q723	8-729-900-63	TRANSISTOR	BN1F4M-TP			
Q724	8-729-281-53	TRANSISTOR	2SC1815GR-TPE2			
Q751	8-729-119-79	TRANSISTOR	2SC2785TP-FEK			
Q752	8-729-281-53	TRANSISTOR	2SC1815GR-TPE2			
Q753	8-729-140-82	TRANSISTOR	2SA988TP-PAFAEA			
Q771	8-729-900-63	TRANSISTOR	BN1F4M-TP			
Q801	8-729-140-97	TRANSISTOR	2SB734-T-34			
Q806	8-729-823-22	TRANSISTOR	2SC3576-AC			
Q822	8-729-900-36	TRANSISTOR	BA1F4M-TP			
Q823	8-729-900-36	TRANSISTOR	BA1F4M-TP			
Q824	8-729-900-36	TRANSISTOR	BA1F4M-TP			
Q825	8-729-900-36	TRANSISTOR	BA1F4M-TP			
Q862	8-729-115-44	TRANSISTOR	BN1F4M-TP			
Q863	8-729-115-44	TRANSISTOR	BN1F4M-TP			
Q866	8-729-115-44	TRANSISTOR	BN1F4M-TP			
Q870	8-729-119-79	TRANSISTOR	2SC2785TP-FEK			
Q871	8-729-139-79	TRANSISTOR	2SC2785TP-FEK			
Q875	8-729-139-79	TRANSISTOR	2SC2785TP-FEK			
Q880	8-729-140-97	TRANSISTOR	2SB734-T-34			
Q881	8-729-119-79	TRANSISTOR	2SC2785TP-FEK			
Q901	8-729-119-79	TRANSISTOR	2SC2785TP-FEK			
Q910	8-729-209-15	TRANSISTOR	2SD2012			
Q912	8-729-900-36	TRANSISTOR	BA1F4M-TP			
Q913	8-729-900-63	TRANSISTOR	BN1F4M-TP			
		< RESISTOR >				
R400	1-249-433-11	CARBON	22K	5%	1/4W	
R411	1-249-417-11	CARBON	1K	5%	1/4W	F
R412	1-249-439-11	CARBON	68K	5%	1/4W	
R415	1-249-439-11	CARBON	68K	5%	1/4W	
R416	1-249-421-11	CARBON	2.2K	5%	1/4W	F
R421	1-249-440-11	CARBON	82K	5%	1/4W	
R422	1-249-421-11	CARBON	2.2K	5%	1/4W	F
⚠R423	1-249-405-11	CARBON	100	5%	1/4W	F
R424	1-249-414-11	CARBON	560	5%	1/4W	F
⚠R425	1-249-405-11	CARBON	100	5%	1/4W	F
R426	1-247-850-11	CARBON	6.2K	5%	1/4W	
R427	1-249-425-11	CARBON	4.7K	5%	1/4W	F
⚠R428	1-234-182-11	ENCAPSULATED COMPONENT				
R429	1-249-419-11	CARBON	1.5K	5%	1/4W	F
R430	1-247-881-00	CARBON	120K	5%	1/4W	
⚠R431	1-249-393-11	CARBON	10	5%	1/4W	F
R433	1-249-431-11	CARBON	15K	5%	1/4W	
R437	1-249-437-11	CARBON	47K	5%	1/4W	
⚠R440	1-249-389-11	CARBON	4.7	5%	1/4W	F
R443	1-249-429-11	CARBON	10K	5%	1/4W	
R444	1-249-417-11	CARBON	1K	5%	1/4W	F
R445	1-249-441-11	CARBON	100K	5%	1/4W	
R449	1-249-401-11	CARBON	47	5%	1/4W	F
R451	1-249-425-11	CARBON	4.7K	5%	1/4W	F
⚠R455	1-249-404-00	CARBON	82	5%	1/4W	F
R461	1-249-417-11	CARBON	1K	5%	1/4W	F
R462	1-249-439-11	CARBON	68K	5%	1/4W	
R465	1-249-439-11	CARBON	68K	5%	1/4W	
R466	1-249-421-11	CARBON	2.2K	5%	1/4W	F
R471	1-249-440-11	CARBON	82K	5%	1/4W	
R472	1-249-421-11	CARBON	2.2K	5%	1/4W	F

Ref. No.	Part No.	Description				Remarks
⚠R473	1-249-405-11	CARBON	100	5%	1/4W	F
R474	1-249-414-11	CARBON	560	5%	1/4W	F
⚠R475	1-249-405-11	CARBON	100	5%	1/4W	F
R476	1-247-850-11	CARBON	6.2K	5%	1/4W	
R477	1-249-425-11	CARBON	4.7K	5%	1/4W	F
⚠R478	1-234-182-11	ENCAPSULATED COMPONENT				
R479	1-249-419-11	CARBON	1.5K	5%	1/4W	F
R480	1-247-881-00	CARBON	120K	5%	1/4W	
⚠R481	1-249-393-11	CARBON	10	5%	1/4W	F
R482	1-249-435-11	CARBON	33K	5%	1/4W	
R483	1-249-431-11	CARBON	15K	5%	1/4W	
R484	1-249-431-11	CARBON	15K	5%	1/4W	
R485	1-249-433-11	CARBON	22K	5%	1/4W	
R486	1-249-433-11	CARBON	22K	5%	1/4W	
R487	1-249-437-11	CARBON	47K	5%	1/4W	
R488	1-249-429-11	CARBON	10K	5%	1/4W	
⚠R490	1-249-389-11	CARBON	4.7	5%	1/4W	F
R493	1-249-429-11	CARBON	10K	5%	1/4W	
R494	1-249-441-11	CARBON	100K	5%	1/4W	
R495	1-249-417-11	CARBON	1K	5%	1/4W	F
R500	1-249-433-11	CARBON	22K	5%	1/4W	
R511	1-249-417-11	CARBON	1K	5%	1/4W	F
R512	1-249-439-11	CARBON	68K	5%	1/4W	
R515	1-249-439-11	CARBON	68K	5%	1/4W	
R516	1-249-421-11	CARBON	2.2K	5%	1/4W	F
R521	1-249-440-11	CARBON	82K	5%	1/4W	
R522	1-249-421-11	CARBON	2.2K	5%	1/4W	F
⚠R523	1-249-405-11	CARBON	100	5%	1/4W	F
R524	1-249-414-11	CARBON	560	5%	1/4W	F
⚠R525	1-249-405-11	CARBON	100	5%	1/4W	F
R526	1-247-850-11	CARBON	6.2K	5%	1/4W	
R527	1-249-425-11	CARBON	4.7K	5%	1/4W	F
⚠R528	1-234-182-11	ENCAPSULATED COMPONENT				
R529	1-249-419-11	CARBON	1.5K	5%	1/4W	F
R530	1-247-881-00	CARBON	120K	5%	1/4W	
⚠R531	1-249-393-11	CARBON	10	5%	1/4W	F
R532	1-249-435-11	CARBON	33K	5%	1/4W	
R533	1-249-431-11	CARBON	15K	5%	1/4W	
R534	1-249-431-11	CARBON	15K	5%	1/4W	
R535	1-249-433-11	CARBON	22K	5%	1/4W	
R536	1-249-433-11	CARBON	22K	5%	1/4W	
R537	1-249-437-11	CARBON	47K	5%	1/4W	
R538	1-249-429-11	CARBON	10K	5%	1/4W	
⚠R540	1-249-389-11	CARBON	4.7	5%	1/4W	F
R543	1-249-429-11	CARBON	10K	5%	1/4W	
R544	1-249-441-11	CARBON	100K	5%	1/4W	
R545	1-249-417-11	CARBON	1K	5%	1/4W	F
R551	1-249-425-11	CARBON	4.7K	5%	1/4W	F
⚠R553	1-249-404-00	CARBON	82	5%	1/4W	F
R561	1-249-417-11	CARBON	1K	5%	1/4W	F
R562	1-249-439-11	CARBON	68K	5%	1/4W	
R565	1-249-439-11	CARBON	68K	5%	1/4W	
R566	1-249-421-11	CARBON	2.2K	5%	1/4W	F
R569	1-249-441-11	CARBON	100K	5%	1/4W	
R571	1-249-440-11	CARBON	82K	5%	1/4W	

The components identified by mark ⚠ or dotted line with mark ⚠ are critical for safety. Replace only with part number specified.	Les composants identifiés par une marque ⚠ sont critiques pour la sécurité. Ne les remplacer que par une pièce portant le numéro spécifié.

MAIN

Ref. No.	Part No.	Description				Remarks
R572	1-249-421-11	CARBON	2.2K	5%	1/4W	F
⚠R573	1-249-405-11	CARBON	100	5%	1/4W	F
R574	1-249-414-11	CARBON	560	5%	1/4W	F
⚠R575	1-249-405-11	CARBON	100	5%	1/4W	F
R576	1-247-850-11	CARBON	6.2K	5%	1/4W	
R577	1-249-425-11	CARBON	4.7K	5%	1/4W	F
⚠R578	1-234-182-11	ENCAPSULATED COMPONENT				
R579	1-249-419-11	CARBON	1.5K	5%	1/4W	F
R580	1-247-881-00	CARBON	120K	5%	1/4W	
⚠R581	1-249-393-11	CARBON	10	5%	1/4W	F
R582	1-249-435-11	CARBON	33K	5%	1/4W	
R583	1-249-431-11	CARBON	15K	5%	1/4W	
R584	1-249-431-11	CARBON	15K	5%	1/4W	
R585	1-249-433-11	CARBON	22K	5%	1/4W	
R586	1-249-433-11	CARBON	22K	5%	1/4W	
R587	1-249-437-11	CARBON	47K	5%	1/4W	
R588	1-249-429-11	CARBON	10K	5%	1/4W	
⚠R590	1-249-389-11	CARBON	4.7	5%	1/4W	F
R593	1-249-429-11	CARBON	10K	5%	1/4W	
R594	1-249-441-11	CARBON	100K	5%	1/4W	
R595	1-249-417-11	CARBON	1K	5%	1/4W	F
R600	1-249-433-11	CARBON	22K	5%	1/4W	
R611	1-249-417-11	CARBON	1K	5%	1/4W	F
R612	1-249-439-11	CARBON	68K	5%	1/4W	
R615	1-249-439-11	CARBON	68K	5%	1/4W	
R616	1-249-421-11	CARBON	2.2K	5%	1/4W	F
R621	1-249-440-11	CARBON	82K	5%	1/4W	
R622	1-249-421-11	CARBON	2.2K	5%	1/4W	F
⚠R623	1-249-405-11	CARBON	100	5%	1/4W	F
R624	1-249-414-11	CARBON	560	5%	1/4W	F
⚠R625	1-249-405-11	CARBON	100	5%	1/4W	F
R626	1-247-850-11	CARBON	6.2K	5%	1/4W	
R627	1-249-425-11	CARBON	4.7K	5%	1/4W	F
⚠R628	1-234-182-11	ENCAPSULATED COMPONENT				
R629	1-249-419-11	CARBON	1.5K	5%	1/4W	F
R630	1-247-881-00	CARBON	120K	5%	1/4W	
⚠R631	1-249-393-11	CARBON	10	5%	1/4W	F
R632	1-249-435-11	CARBON	33K	5%	1/4W	
R633	1-249-431-11	CARBON	15K	5%	1/4W	
R634	1-249-431-11	CARBON	15K	5%	1/4W	
R635	1-249-433-11	CARBON	22K	5%	1/4W	
R636	1-249-433-11	CARBON	22K	5%	1/4W	
R637	1-249-437-11	CARBON	47K	5%	1/4W	
R638	1-249-429-11	CARBON	10K	5%	1/4W	
⚠R640	1-249-389-11	CARBON	4.7	5%	1/4W	F
R643	1-249-429-11	CARBON	10K	5%	1/4W	
R644	1-249-441-11	CARBON	100K	5%	1/4W	
R645	1-249-417-11	CARBON	1K	5%	1/4W	F
R651	1-249-425-11	CARBON	4.7K	5%	1/4W	F
R653	1-249-404-00	CARBON	82	5%	1/4W	F
R661	1-249-417-11	CARBON	1K	5%	1/4W	F
R662	1-249-439-11	CARBON	68K	5%	1/4W	
R665	1-249-439-11	CARBON	68K	5%	1/4W	
R666	1-249-421-11	CARBON	2.2K	5%	1/4W	F
R671	1-249-440-11	CARBON	82K	5%	1/4W	
R672	1-249-421-11	CARBON	2.2K	5%	1/4W	F
⚠R673	1-249-405-11	CARBON	100	5%	1/4W	F
R674	1-249-414-11	CARBON	560	5%	1/4W	F
⚠R675	1-249-405-11	CARBON	100	5%	1/4W	F
R676	1-247-850-11	CARBON	6.2K	5%	1/4W	
R677	1-249-425-11	CARBON	4.7K	5%	1/4W	F
⚠R678	1-234-182-11	ENCAPSULATED COMPONENT				
R679	1-249-419-11	CARBON	1.5K	5%	1/4W	F
R680	1-247-881-00	CARBON	120K	5%	1/4W	
⚠R681	1-249-393-11	CARBON	10	5%	1/4W	F
R682	1-249-435-11	CARBON	33K	5%	1/4W	
R683	1-249-431-11	CARBON	15K	5%	1/4W	
R684	1-249-431-11	CARBON	15K	5%	1/4W	
R685	1-249-433-11	CARBON	22K	5%	1/4W	
R686	1-249-433-11	CARBON	22K	5%	1/4W	
R687	1-249-437-11	CARBON	47K	5%	1/4W	
R688	1-249-429-11	CARBON	10K	5%	1/4W	
⚠R690	1-249-389-11	CARBON	4.7	5%	1/4W	F
R693	1-249-429-11	CARBON	10K	5%	1/4W	
R694	1-249-441-11	CARBON	100K	5%	1/4W	
R695	1-249-417-11	CARBON	1K	5%	1/4W	F
R731	1-249-429-11	CARBON	10K	5%	1/4W	
R732	1-249-429-11	CARBON	10K	5%	1/4W	
R733	1-249-438-11	CARBON	56K	5%	1/4W	
R734	1-247-887-00	CARBON	220K	5%	1/4W	
R735	1-249-429-11	CARBON	10K	5%	1/4W	
R736	1-247-895-00	CARBON	470K	5%	1/4W	
R737	1-249-429-11	CARBON	10K	5%	1/4W	
R738	1-215-883-11	METAL OXIDE	33	5%	2W	
R739	1-216-453-00	METAL OXIDE	270	5%	2W	
⚠R741	1-249-381-11	CARBON	1	5%	1/4W	F
⚠R742	1-249-381-11	CARBON	1	5%	1/4W	F
R750	1-249-429-11	CARBON	10K	5%	1/4W	
R751	1-249-427-11	CARBON	6.8K	5%	1/4W	F
R752	1-249-437-11	CARBON	47K	5%	1/4W	
R753	1-249-417-11	CARBON	1K	5%	1/4W	F
R756	1-249-429-11	CARBON	10K	5%	1/4W	
R771	1-249-437-11	CARBON	47K	5%	1/4W	
R800	1-247-865-81	CARBON	27K	5%	1/4W	
R801	1-247-865-81	CARBON	27K	5%	1/4W	
⚠R803	1-249-389-11	CARBON	4.7	5%	1/4W	F
R804	1-249-427-11	CARBON	6.8K	5%	1/4W	F
R806	1-249-414-11	CARBON	560	5%	1/4W	F
R808	1-249-421-11	CARBON	2.2K	5%	1/4W	F
⚠R810	1-240-877-11	FUSIBLE	0.15	5%	1/2W	
⚠R811	1-240-877-11	FUSIBLE	0.15	5%	1/2W	
⚠R812	1-240-877-11	FUSIBLE	0.15	5%	1/2W	
R819	1-249-401-11	CARBON	47	5%	1/4W	F
R820	1-249-416-11	CARBON	820	5%	1/4W	F
R822	1-247-807-31	CARBON	100	5%	1/4W	
R823	1-249-429-11	CARBON	10K	5%	1/4W	
R830	1-249-421-11	CARBON	2.2K	5%	1/4W	F
R831	1-249-417-11	CARBON	1K	5%	1/4W	F
R832	1-249-421-11	CARBON	2.2K	5%	1/4W	F
R833	1-249-417-11	CARBON	1K	5%	1/4W	F
R839	1-249-425-11	CARBON	4.7K	5%	1/4W	F
R841	1-215-868-00	METAL OXIDE	680	5%	1W	
R842	1-215-868-00	METAL OXIDE	680	5%	1W	

The components identified by mark ⚠ or dotted line with mark ⚠ are critical for safety. Replace only with part number specified.	Les composants identifiés par une marque ⚠ sont critiques pour la sécurité. Ne les remplacer que par une pièce portant le numéro spécifié.

MAIN

Ref. No.	Part No.	Description			Remarks
⚠R850	1-249-389-11	CARBON	4.7	5%	1/4W F
R868	1-249-409-11	CARBON	220	5%	1/4W F
R869	1-249-437-11	CARBON	47K	5%	1/4W
R870	1-249-438-11	CARBON	56K	5%	1/4W
R871	1-249-437-11	CARBON	47K	5%	1/4W
R872	1-249-417-11	CARBON	1K	5%	1/4W F
R873	1-247-855-81	CARBON	10K	5%	1/4W
R874	1-247-829-81	CARBON	820	5%	1/4W
R875	1-247-847-81	CARBON	4.7K	5%	1/4W
R876	1-247-875-81	CARBON	68K	5%	1/4W
R877	1-247-877-81	CARBON	220	5%	1/4W
R878	1-247-879-81	CARBON	100K	5%	1/4W
R879	1-247-855-81	CARBON	10K	5%	1/4W
R880	1-249-417-11	CARBON	1K	5%	1/4W F
R881	1-247-835-81	CARBON	1.5K	5%	1/4W
⚠R882	1-249-404-00	CARBON	82	5%	1/4W F
R883	1-247-839-81	CARBON	2.2K	5%	1/4W
R884	1-247-855-81	CARBON	10K	5%	1/4W
R885	1-247-807-81	CARBON	100	5%	1/4W
R887	1-247-831-81	CARBON	1K	5%	1/4W
R888	1-247-865-81	CARBON	27K	5%	1/4W
R889	1-247-865-81	CARBON	27K	5%	1/4W
R890	1-249-417-11	CARBON	1K	5%	1/4W F
R895	1-249-433-11	CARBON	22K	5%	1/4W
R896	1-249-429-11	CARBON	10K	5%	1/4W
R897	1-249-433-11	CARBON	22K	5%	1/4W
R898	1-249-433-11	CARBON	22K	5%	1/4W
R899	1-247-865-81	CARBON	27K	5%	1/4W
R900	1-247-865-81	CARBON	27K	5%	1/4W
⚠R901	1-202-725-00	SOLID	3.3M	10%	1/2W (US,CND,MX)
R902	1-249-437-11	CARBON	47K	5%	1/4W
R903	1-249-425-11	CARBON	4.7K	5%	1/4W F
⚠R904	1-249-381-11	CARBON	1	5%	1/4W F
R905	1-247-807-31	CARBON	100	5%	1/4W
R906	1-247-807-31	CARBON	100	5%	1/4W
R907	1-247-807-31	CARBON	100	5%	1/4W
R908	1-247-807-31	CARBON	100	5%	1/4W
R909	1-247-807-31	CARBON	100	5%	1/4W
R910	1-247-807-31	CARBON	100	5%	1/4W
R911	1-249-425-11	CARBON	4.7K	5%	1/4W F
R912	1-249-425-11	CARBON	4.7K	5%	1/4W F
R913	1-249-429-11	CARBON	10K	5%	1/4W
R914	1-247-807-31	CARBON	100	5%	1/4W
R915	1-247-807-31	CARBON	100	5%	1/4W
R918	1-249-433-11	CARBON	22K	5%	1/4W
R919	1-247-807-31	CARBON	100	5%	1/4W
R920	1-247-807-31	CARBON	100	5%	1/4W
R921	1-249-437-11	CARBON	47K	5%	1/4W
R922	1-249-425-11	CARBON	4.7K	5%	1/4W F
R923	1-249-421-11	CARBON	2.2K	5%	1/4W F
R924	1-249-417-11	CARBON	1K	5%	1/4W F
R925	1-247-807-31	CARBON	100	5%	1/4W
R926	1-247-807-31	CARBON	100	5%	1/4W
R927	1-247-807-31	CARBON	100	5%	1/4W
R928	1-249-431-11	CARBON	15K	5%	1/4W
R929	1-247-903-00	CARBON	1M	5%	1/4W
R930	1-249-429-11	CARBON	10K	5%	1/4W (US,CND)
R934	1-249-429-11	CARBON	10K	5%	1/4W
R935	1-249-429-11	CARBON	10K	5%	1/4W
R936	1-249-429-11	CARBON	10K	5%	1/4W
R937	1-247-807-31	CARBON	100	5%	1/4W
R938	1-247-807-31	CARBON	100	5%	1/4W
R939	1-249-429-11	CARBON	10K	5%	1/4W
R940	1-249-428-11	CARBON	8.2K	5%	1/4W F
R941	1-249-429-11	CARBON	10K	5%	1/4W
R942	1-249-429-11	CARBON	10K	5%	1/4W
R943	1-249-429-11	CARBON	10K	5%	1/4W
R944	1-249-429-11	CARBON	10K	5%	1/4W
R945	1-249-429-11	CARBON	10K	5%	1/4W
R946	1-249-429-11	CARBON	10K	5%	1/4W
R947	1-249-433-11	CARBON	22K	5%	1/4W
R949	1-249-433-11	CARBON	22K	5%	1/4W
R950	1-247-807-31	CARBON	100	5%	1/4W
R951	1-249-429-11	CARBON	10K	5%	1/4W
R952	1-247-807-31	CARBON	100	5%	1/4W
R953	1-247-807-31	CARBON	100	5%	1/4W
R954	1-249-437-11	CARBON	47K	5%	1/4W
R955	1-249-429-11	CARBON	10K	5%	1/4W
R956	1-249-429-11	CARBON	10K	5%	1/4W
R957	1-249-429-11	CARBON	10K	5%	1/4W
R958	1-249-433-11	CARBON	22K	5%	1/4W
R959	1-249-422-11	CARBON	2.7K	5%	1/4W F
R960	1-249-433-11	CARBON	22K	5%	1/4W
R961	1-247-843-11	CARBON	3.3K	5%	1/4W
R962	1-247-807-31	CARBON	100	5%	1/4W
R963	1-247-807-31	CARBON	100	5%	1/4W
R964	1-249-429-11	CARBON	10K	5%	1/4W
R965	1-247-807-31	CARBON	100	5%	1/4W
R966	1-249-425-11	CARBON	4.7K	5%	1/4W F
R967	1-247-807-31	CARBON	100	5%	1/4W
R968	1-247-807-31	CARBON	100	5%	1/4W
R969	1-247-807-31	CARBON	100	5%	1/4W
R970	1-247-807-31	CARBON	100	5%	1/4W
R971	1-249-425-11	CARBON	4.7K	5%	1/4W F
R972	1-249-425-11	CARBON	4.7K	5%	1/4W F
R973	1-249-425-11	CARBON	4.7K	5%	1/4W F
R974	1-247-807-31	CARBON	100	5%	1/4W
R975	1-247-807-31	CARBON	100	5%	1/4W
R976	1-249-393-11	CARBON	10	5%	1/4W F
R977	1-249-393-11	CARBON	10	5%	1/4W F
R978	1-247-807-31	CARBON	100	5%	1/4W
R979	1-247-807-31	CARBON	100	5%	1/4W
R980	1-247-807-31	CARBON	100	5%	1/4W
R981	1-249-393-11	CARBON	10	5%	1/4W F
R982	1-249-393-11	CARBON	10	5%	1/4W F
R983	1-247-807-31	CARBON	100	5%	1/4W
R984	1-247-807-31	CARBON	100	5%	1/4W
R985	1-247-807-31	CARBON	100	5%	1/4W

The components identified by mark ⚠ or dotted line with mark ⚠ are critical for safety. Replace only with part number specified.	Les composants identifiés par une marque ⚠ sont critiques pour la sécurité. Ne les remplacer que par une pièce portant le numéro spécifié.

MAIN | MD-94 | OPEN/CLOSE | POWER SWITCH | RF

Ref. No.	Part No.	Description			Remarks
		< RELAY >			
RY401	1-755-416-12	RELAY			
RY501	1-755-416-12	RELAY			
RY601	1-755-416-12	RELAY			
RY881	1-755-416-12	RELAY			
⚠RY901	1-755-298-11	RELAY			
		< TRANSFORMER >			
⚠T902	1-435-281-11	TRANSFORMER, POWER (US,CND,MX)			
⚠T902	1-435-434-11	TRANSFORMER, POWER (E51)			
⚠T902	1-435-435-11	TRANSFORMER, POWER (AEP,UK)			
		< TERMINAL >			
TM601	1-694-998-11	TERMINAL BOARD (SPEAKER) (SPEAKERS)			
		< VIBRATOR >			
X901	1-795-721-21	VIBRATOR, CERAMIC 20MHz			
**********					
		MD-94 BOARD			
		**********			
		< CONNECTOR >			
CN004	1-506-481-11	PIN, CONNECTOR 2P			
* CN003	1-564-013-11	PIN, CONNECTOR 3P			
CN001	1-506-490-21	PIN, CONNECTOR 11P			
CN002	1-784-767-11	CONNECTOR, FFC 6P			
		< SWITCH >			
S001	1-786-357-12	SWITCH, LEVER (SLIDE)			
**********					
	1-686-958-11	OPEN/CLOSE BOARD			
		**********			
		< RESISTOR >			
R124	1-216-837-11	METAL CHIP	22K	5%	1/16W
R129	1-216-829-11	METAL CHIP	4.7K	5%	1/16W
R130	1-216-833-11	METAL CHIP	10K	5%	1/16W
		< SWITCH >			
S104	1-771-410-21	SWITCH, TACTILE (EX-CHANGE)			
S109	1-771-410-21	SWITCH, TACTILE (DISC SKIP)			
S110	1-771-410-21	SWITCH, TACTILE (OPEN/CLOSE)			
**********					
	1-686-957-11	POWER SWITCH BOARD			
		**********			
		< CONNECTOR >			
CNP102	1-564-505-11	PLUG, CONNECTOR 2P (US,CND,E51,MX)			
CNP102	1-564-506-11	PLUG, CONNECTOR 3P (AEP,UK)			
		< SWITCH >			
S116	1-771-410-21	SWITCH, TACTILE (I/⏻)			
**********					

Ref. No.	Part No.	Description			Remarks
	A-4728-690-A	RF BOARD, COMPLETE			
		**********			
		< CAPACITOR >			
C001	1-126-206-11	ELECT CHIP	100uF	20%	6.3V
C002	1-124-779-00	ELECT CHIP	10uF	20%	16V
C003	1-126-206-11	ELECT CHIP	100uF	20%	6.3V
C004	1-124-779-00	ELECT CHIP	10uF	20%	16V
C005	1-128-993-21	ELECT CHIP	22uF	20%	10V
C006	1-128-993-21	ELECT CHIP	22uF	20%	10V
C008	1-107-826-11	CERAMIC CHIP	0.1uF	10.00%	16V
C009	1-107-826-11	CERAMIC CHIP	0.1uF	10.00%	16V
C010	1-115-416-11	CERAMIC CHIP	0.001uF	5.00%	25V
C011	1-115-416-11	CERAMIC CHIP	0.001uF	5.00%	25V
C012	1-107-826-11	CERAMIC CHIP	0.1uF	10.00%	16V
C013	1-107-826-11	CERAMIC CHIP	0.1uF	10.00%	16V
C014	1-162-966-11	CERAMIC CHIP	0.0022uF	10%	50V
C015	1-162-966-11	CERAMIC CHIP	0.0022uF	10%	50V
C016	1-162-966-11	CERAMIC CHIP	0.0022uF	10%	50V
C017	1-162-966-11	CERAMIC CHIP	0.0022uF	10%	50V
C018	1-164-172-11	CERAMIC CHIP	0.0056uF	10.00%	25V
C019	1-164-172-11	CERAMIC CHIP	0.0056uF	10.00%	25V
C020	1-162-919-11	CERAMIC CHIP	22PF	5%	50V
C021	1-162-919-11	CERAMIC CHIP	22PF	5%	50V
C022	1-162-919-11	CERAMIC CHIP	22PF	5%	50V
C023	1-162-919-11	CERAMIC CHIP	22PF	5%	50V
C024	1-162-970-11	CERAMIC CHIP	0.01uF	10%	25V
C025	1-107-826-11	CERAMIC CHIP	0.1uF	10.00%	16V
C026	1-107-826-11	CERAMIC CHIP	0.1uF	10.00%	16V
C027	1-107-826-11	CERAMIC CHIP	0.1uF	10.00%	16V
C028	1-107-826-11	CERAMIC CHIP	0.1uF	10.00%	16V
C029	1-162-970-11	CERAMIC CHIP	0.01uF	10%	25V
C030	1-162-970-11	CERAMIC CHIP	0.01uF	10%	25V
C031	1-115-416-11	CERAMIC CHIP	0.001uF	5.00%	25V
C032	1-165-176-11	CERAMIC CHIP	0.047uF	10.00%	16V
C033	1-107-826-11	CERAMIC CHIP	0.1uF	10.00%	16V
C034	1-107-826-11	CERAMIC CHIP	0.1uF	10.00%	16V
C035	1-107-826-11	CERAMIC CHIP	0.1uF	10.00%	16V
C036	1-125-891-11	CERAMIC CHIP	0.47uF	10.00%	10V
C037	1-162-959-11	CERAMIC CHIP	330PF	5%	50V
C038	1-164-677-11	CERAMIC CHIP	0.033uF	10.00%	16V
C039	1-164-677-11	CERAMIC CHIP	0.033uF	10.00%	16V
C040	1-107-826-11	CERAMIC CHIP	0.1uF	10.00%	16V
C041	1-107-826-11	CERAMIC CHIP	0.1uF	10.00%	16V
C042	1-164-218-11	CERAMIC CHIP	180PF	0.25PF	50V
C049	1-107-826-11	CERAMIC CHIP	0.1uF	10.00%	16V
		< CONNECTOR >			
CN001	1-815-031-11	CONNECTOR, FFC/FPC (ZIF) 24P			
CN002	1-784-836-21	CONNECTOR,FFC(LIF(NON-ZIF))29P			
CN003	1-784-861-21	CONNECTOR, FFC(LIF(NON-ZIF))9P			
		< DIODE >			
D001	8-719-988-61	DIODE 1SS355TE-17			
D002	8-719-988-61	DIODE 1SS355TE-17			

The components identified by mark ⚠ or dotted line with mark ⚠ are critical for safety. Replace only with part number specified.	Les composants identifiés par une marque ⚠ sont critiques pour la sécurité. Ne les remplacer que par une pièce portant le numéro spécifié.

RF | SE-130 | VOLTAGE SEL

Ref. No.	Part No.	Description				Remarks
		< IC >				
IC001	6-703-551-01	IC CXD1881AR				
		< COIL >				
L001	1-412-031-11	INDUCTOR CHIP	47uH			
L002	1-412-031-11	INDUCTOR CHIP	47uH			
		< TRANSISTOR >				
Q001	8-729-903-46	TRANSISTOR	2SB1132-T100-QR			
Q002	8-729-903-46	TRANSISTOR	2SB1132-T100-QR			
		< RESISTOR >				
R001	1-218-668-11	METAL CHIP	100	0.5%	1/10W	
R003	1-216-803-11	METAL CHIP	33	5%	1/16W	
R004	1-216-803-11	METAL CHIP	33	5%	1/16W	
R005	1-216-841-11	METAL CHIP	47K	5%	1/16W	
R006	1-216-817-11	METAL CHIP	470	5%	1/16W	
R007	1-216-803-11	METAL CHIP	33	5%	1/16W	
R008	1-216-803-11	METAL CHIP	33	5%	1/16W	
R009	1-216-841-11	METAL CHIP	47K	5%	1/16W	
R010	1-216-817-11	METAL CHIP	470	5%	1/16W	
R011	1-216-864-11	METAL CHIP	0	5%	1/16W	
R012	1-216-864-11	METAL CHIP	0	5%	1/16W	
R013	1-216-864-11	METAL CHIP	0	5%	1/16W	
R014	1-216-864-11	METAL CHIP	0	5%	1/16W	
R015	1-216-864-11	METAL CHIP	0	5%	1/16W	
R016	1-216-864-11	METAL CHIP	0	5%	1/16W	
R017	1-216-864-11	METAL CHIP	0	5%	1/16W	
R018	1-216-864-11	METAL CHIP	0	5%	1/16W	
R019	1-216-864-11	METAL CHIP	0	5%	1/16W	
R020	1-216-864-11	METAL CHIP	0	5%	1/16W	
R021	1-216-864-11	METAL CHIP	0	5%	1/16W	
R022	1-216-813-11	METAL CHIP	220	5%	1/16W	
R023	1-216-820-11	METAL CHIP	820	5%	1/16W	
R024	1-216-864-11	METAL CHIP	0	5%	1/16W	
R025	1-216-809-11	METAL CHIP	100	5%	1/16W	
R026	1-218-718-11	METAL CHIP	12K	0.5%	1/10W	
R027	1-216-864-11	METAL CHIP	0	5%	1/16W	
R028	1-216-864-11	METAL CHIP	0	5%	1/16W	
R029	1-216-864-11	METAL CHIP	0	5%	1/16W	
R032	1-216-809-11	METAL CHIP	100	5%	1/16W	
R033	1-216-864-11	METAL CHIP	0	5%	1/16W	
R034	1-219-570-11	METAL CHIP	10M	5%	1/10W	
R035	1-216-864-11	METAL CHIP	0	5%	1/16W	
R041	1-216-821-11	METAL CHIP	1K	5%	1/16W	

****

	A-6060-642-A	SE-130 BOARD, COMPLETE **********	
		< CONNECTOR >	
CN101	1-750-243-11	SOCKET, CONNECTOR 6P	
CN102	1-573-383-11	PIN, CONNECTOR (PC BOARD) 2P	
		< PHOTO INTERRUPTER >	
PH101	8-749-017-45	SENSOR, PHOTO RPR-220C1N	
PH102	6-600-072-10	IC RPI-392	

****

Ref. No.	Part No.	Description	Remarks
	A-4747-689-A	VOLTAGE SEL BOARD, COMPLETE (E51) **********	
		< CONNECTOR >	
* CNP950	1-565-792-11	PIN, CONNECTOR(3.96MM PITCH)2P (E51)	
CNP951	1-568-106-11	PIN, CONNECTOR(3.96MM PITCH)4P (E51)	
		< SWITCH >	
⚠S801	1771-876-11	SWITHC (VOLTAGE SELECTOR)	(E51)

****

		MISCELLANEOUS **********	
⚠5	1-777-071-23	CORD, POWER (AEP,UK,E51)	
⚠5	1-783-532-11	CORD, POWER (US,CND,MX)	
59	1-773-217-11	WIRE (FLAT TYPE) (25 CORE)	
107	1-773-983-11	WIRE (FLAT TYPE) (5 CORE)	
109	1-775-226-11	WIRE (FLAT TYPE) (25 CORE)	
110	1-769-945-11	WIRE (FLAT TYPE) (11 CORE)	
111	1-773-040-11	WIRE (FLAT TYPE) (17 CORE)	
112	1-769-945-11	WIRE (FLAT TYPE) (11 CORE)	
207	1-418-746-11	ENCODER, ROTARY	
⚠216	1-477-263-11	PICKUP UNIT (TDP022W)	
220	1-824-106-12	CABLE, FLEXIBLE FLAT (24 CORE)	
⚠F901	1-532-504-51	FUSE T4AL/250V (E51)	
⚠F901	1-533-420-11	FUSE, GLASS CYLINDRICAL(DIA.5) 5A/125V	(US,CND,MX)
⚠F901	1-576-107-11	FUSE T3.15AL/250V (AEP,UK)	
FAN1	1-763-978-11	DC FAN	
FL100	1-518-880-11	INDICATOR TUBE, FLUORESCENT	
M001	1-541-632-12	MOTOR, DC (TABLE)	
Q423	8-749-010-25	IC MN2488-OPY-M	
Q424	8-749-010-26	IC MP1620-OPY-M	
Q473	8-749-010-25	IC MN2488-OPY-M	
Q474	8-749-010-26	IC MP1620-OPY-M	
Q523	8-749-010-25	IC MN2488-OPY-M	
Q524	8-749-010-26	IC MP1620-OPY-M	
Q573	8-749-010-25	IC MN2488-OPY-M	
Q574	8-749-010-26	IC MP1620-OPY-M	
Q623	8-749-010-25	IC MN2488-OPY-M	
Q624	8-749-010-26	IC MP1620-OPY-M	
Q673	8-749-010-25	IC MN2488-OPY-M	
Q674	8-749-010-26	IC MP1620-OPY-M	
⚠T901	1-437-993-11	POWER TRANSFORMER (US,CND,MX)	
⚠T901	1-439-642-11	POWER TRANSFORMER(E51)	
⚠T901	1-439-978-11	POWER TRANSFORMER(AEP,UK)	
TM301	1-693-577-13	TUNER UNIT (US,CND,E51,MX)	
TM301	1-693-580-13	TUNER UNIT (AEP,UK)	

The components identified by mark ⚠ or dotted line with mark ⚠ are critical for safety. Replace only with part number specified.	Les composants identifiés par une marque ⚠ sont critiques pour la sécurité. Ne les remplacer que par une pièce portant le numéro spécifié.

MEMO

REVISION HISTORY

Clicking the version allows you to jump to the revised page.
Also, clicking the version at the upper right on the revised page allows you to jump to the next revised page.

Ver.	Date	Description of Revision
1.0	2003.05	New
1.1	2004.08	Addition of note on DMB03 board exchange Addition of RFMON level check Addition of Part No. for LOADING PANEL (SPM-04038, SPM-04049, SPM-04089)
1.2	2004.09	Correction of Part No. for T901 (AEP, UK) (SPM-04093) Correction of F901 (AEP,UK)

SS-WMSP80

SERVICE MANUAL

Ver 1.0 2003. 04

US Model
Canadian Model
AEP Model
UK Model
E Model

- SS-WMSP80 is the sub woofer section in HT-C800DP.

SPECIFICATIONS

Sub woofer (SS-WMSP80)	
Speaker system	Bass reflex
Speaker unit	200 mm dia. cone type
Rated impedance	6 ohms
Dimensions (approx.)	270 × 325 × 333 mm (10 6/8 × 12 7/8 × 13 1/8 inches)
Mass (approx.)	6.5 kg (14 lb 6 oz.)

Design and specifications are subject to change without notice.

SUB WOOFER

9-877-320-01 **Sony Corporation**
2003E16-1 **Home Audio Company**
© 2003.05
Published by Sony Engineering Corporation

SONY®

EXPLODED VIEW AND PARTS LIST

NOTE:

- -XX, -X mean standardized parts, so they may have some differences from the original one.
- Items marked "*" are not stocked since they are seldom required for routine service. Some delay should be anticipated when ordering these items.
- The mechanical parts with no reference number in the exploded views are not supplied.

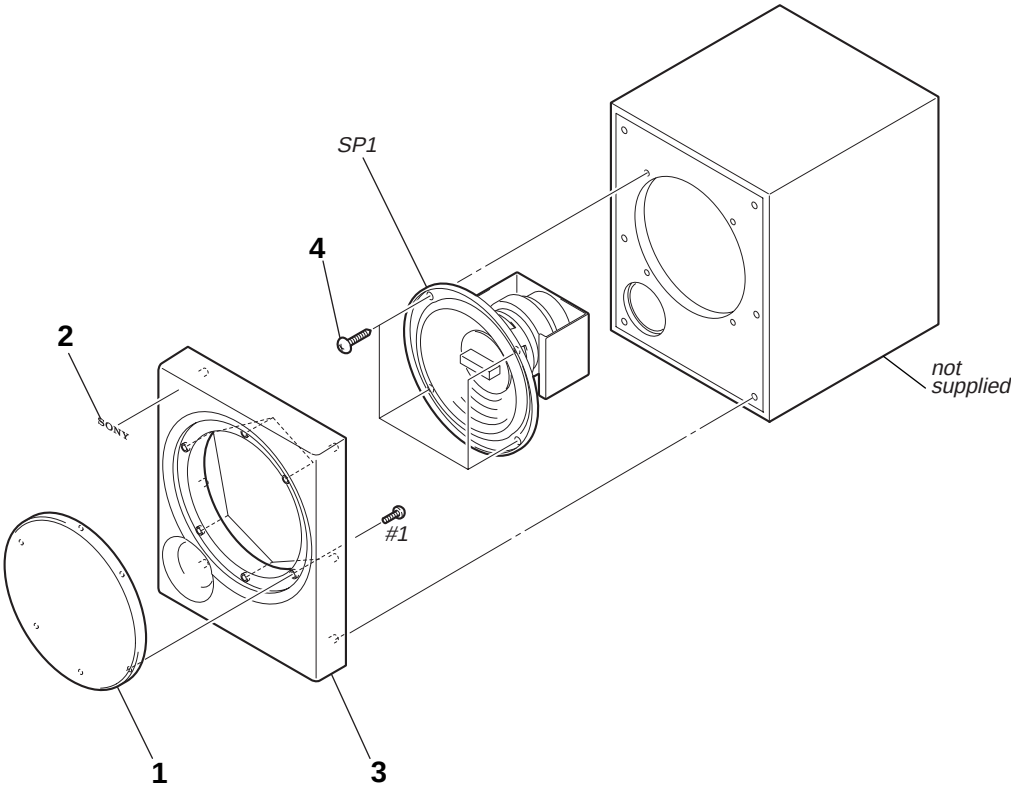

Ref. No.	Part No.	Description	Remark	Ref. No.	Part No.	Description	Remark
1	4-243-842-01	FRAME, GRILLE		4	4-235-677-01	SCREW (4X20) (TYPE1), +BVTP	
2	4-998-417-02	EMBLEM (NO.5), SONY		SP1	1-825-004-13	SPEAKER (20cm)	
3	4-244-708-01	FRONT (PANEL)		#1	7-685-647-79	SCREW +BVTP 3X10 TYPE2 IT-3	

MEMO

REVISION HISTORY

Clicking the version allows you to jump to the revised page.
Also, clicking the version at the upper right on the revised page allows you to jump to the next revised page.

Ver.	Date	Description of Revision
1.0	2003.04	New

SS-CNP75/CRP75/MSP75

SERVICE MANUAL

US Model
Canadian Model
E Model
Australian Model

Ver 1.0 2003. 02

SS-CNP75 SS-MSP75

- SS-CRP75 is the speaker section in HT-DDW750.

- SS-CRP75 is composed of following models.

SS-CRP75	
FRONT and SURROUND speakers	SS-MSP75
CENTER speaker	SS-CNP75

SPECIFICATIONS

Speaker system	Full range, magnetically shielded
Speaker units	70 mm × 100 mm cone type
Enclosure type	Bass reflex
Rated Impedance	8 ohms
Power handling capacity (Maximum input power)	100 W
Sensitivity level	86 dB (1 W, 1 m)
Frequcency range	160 Hz – 20,000 Hz
Dimensions (w/h/d)	
SS-MSP75	Approx. 90 × 150 × 124.5 mm (3 5/8 × 6 × 5 inches)
SS-CNP75	Approx. 230 × 90 × 127 mm (9 1/8 × 3 5.8 × 5 inches)
Mass	
SS-MSP75	0.8 kg (1 lb 13 oz)
SS-CNP75	1.0 kg (2 lb 4 oz)

SPEAKER SYSYTEM

9-877-047-01
2003B1600-1
© 2003.02

Sony Corporation
Home Audio Company
Published by Sony Engineering Corporation

SONY®

EXPLODED VIEWS

NOTE:
- The mechanical parts with no reference number in the exploded views are not supplied.
- -XX, -X mean standardized parts, so they may have some differences from the original one.

SS-CNP75

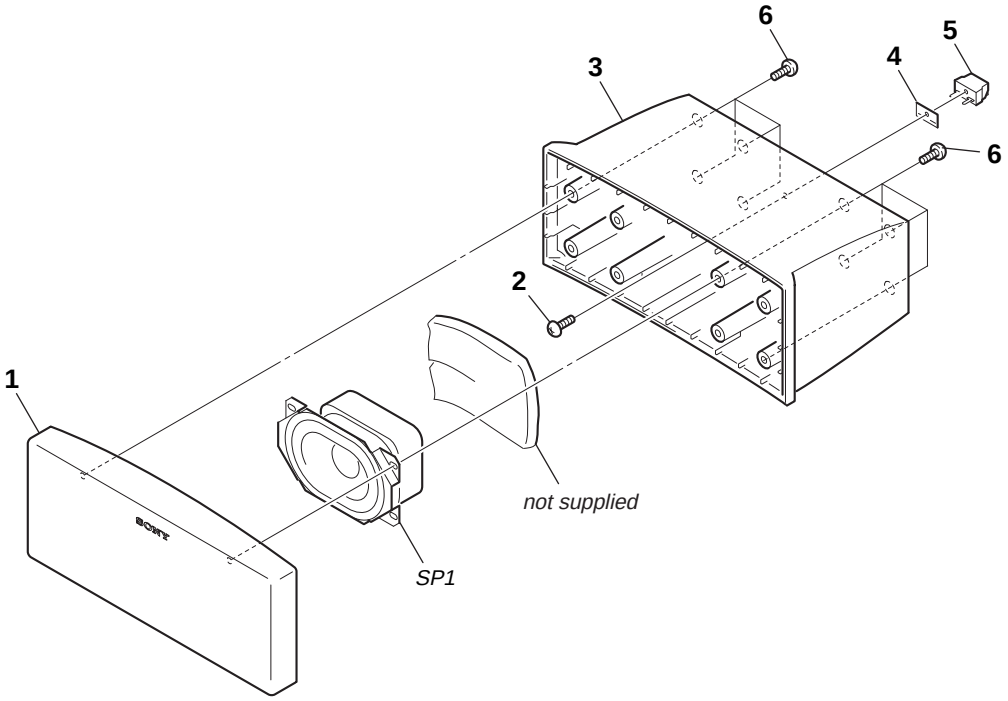

Ref. No.	Part No.	Description	Remark
1	A-4723-985-A	FRONT PANEL ASSY (SILVER)	
1	A-4736-053-A	FRONT PANEL ASSY (BLACK)	
2	4-986-971-01	SCREW (3.5)	
3	4-243-839-01	CABINET (SILVER)	
3	4-243-839-11	CABINET (BLACK)	
4	4-229-803-11	PACKING	
5	1-694-516-11	TERMINAL, SPEAKER	
6	4-246-231-01	SCREW (3.5X14)	
SP1	1-825-003-12	SPEAKER (7X10cm)	

SS-MSP75

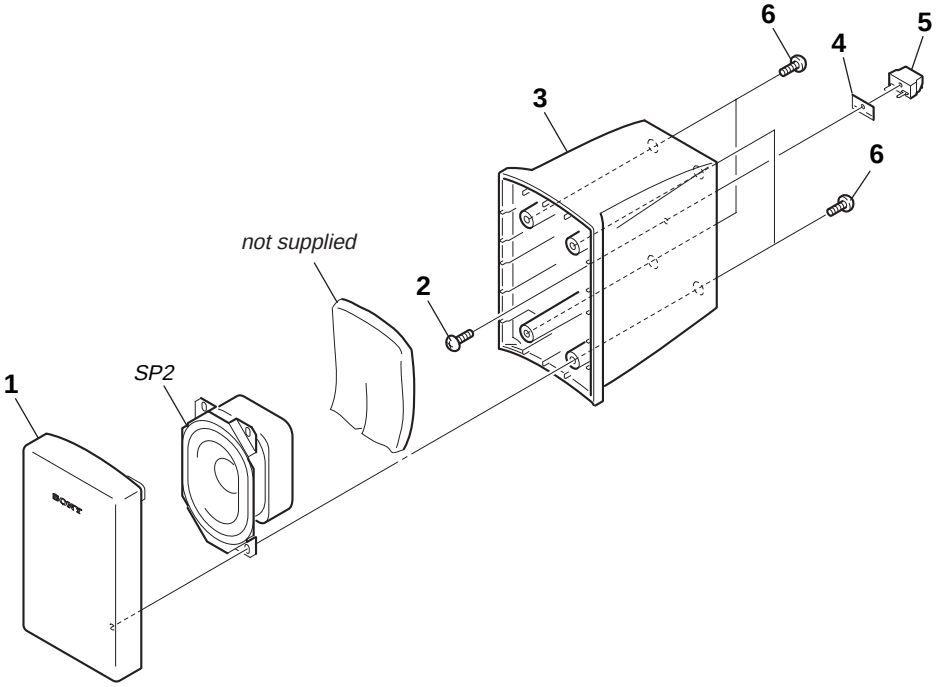

Ref. No.	Part No.	Description	Remark
1	A-4723-981-A	FRONT PANEL ASSY (SILVER)	
1	A-4736-055-A	FRONT PANEL ASSY (BLACK)	
2	4-986-971-01	SCREW (SILVER)	
3	A-4723-982-A	CABINET ASSY (SILVER)	
3	A-4736-056-A	CABINET ASSY (BLACK)	
4	4-229-803-11	PACKING	
5	1-694-516-11	TERMINAL, SPEAKER	
6	4-246-231-01	SCREW (3.5X14)	
SP2	1-825-003-11	SPEAKER (7X10cm)	

REVISION HISTORY

Clicking the version allows you to jump to the revised page.
Also, clicking the version at the upper right on the revised page allows you to jump to the next revised page.

Ver.	Date	Description of Revision
1.0	2003.02	New